Neles™ pneumatic cylinder actuators

Series B1C

Installation, maintenance and operating instructions

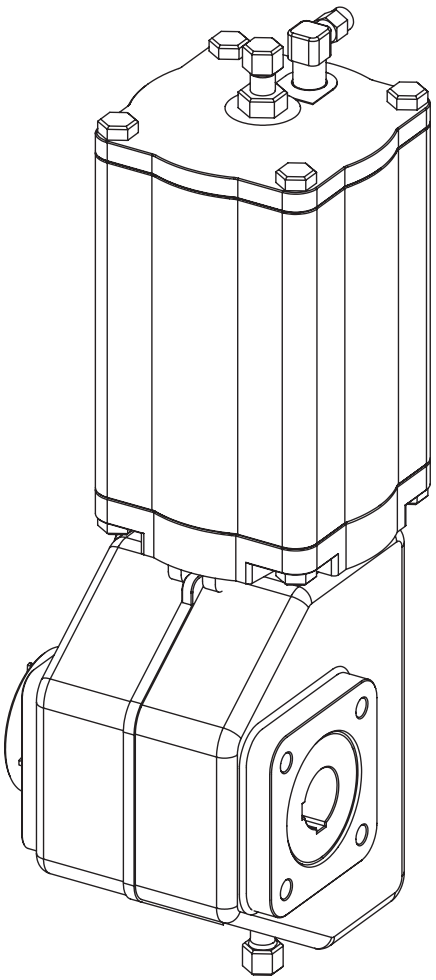

© Valmet, 6BC71EN - 10/2026

Table of contents

GENERAL 3
Scope of the manual 3
Structure and operation 3
Actuator markings 3
Specifications 3
Recycling and disposal 4
Safety precautions 4

TRANSPORTATION, RECEPTION AND STORAGE 4

MOUNTING AND DEMOUNTING 5
Actuator gas supply 5
Mounting the actuator on the valve 5
Demounting the actuator from the valve 6

MAINTENANCE 6
Maintenance general 6
Replacement of piston seals 7
Replacement of linkage bearings and X-rings 8
Maintenance of a B1CM actuator 9
Maintenance of B1C502-752 actuators 9

MALFUNCTIONS 9

TOOLS 9

ORDERING SPARE PARTS 10

EXPLODED VIEWS AND PARTS LISTS 11
Actuators B1C 6 11
Actuators B1C 9-32 12
Actuators B1C 40-75 13
Actuators B1C 502-752 14

DIMENSIONS AND WEIGHTS 15
Actuator B1C 15
Attachment dimensions 16
Center of gravity 17

EU DECLARATION OF CONFORMITY 19

TYPE CODE 20

VALMET PRODUCTS: MACHINERY REGULATION 2027 21

GENERAL SAFETY WARNINGS AND DISCLAIMERS 22
General safety warning 22
General disclaimers 22

READ THESE INSTRUCTIONS FIRST!

These instructions provide information about safe handling and operation of the valve.

If you require additional assistance, please contact the manufacturer or manufacturer's representative.

SAVE THESE INSTRUCTIONS!

Addresses and phone numbers are printed on the back cover.

1. GENERAL

1.1 Scope of the manual

These instructions provide essential information for the use of Neles B1C series actuators. For more details about valves, positioners and accessories, refer to the separate installation, operating and maintenance instructions of the particular unit.

1.2 Structure and operation

Neles™ B1C series actuators are pneumatic cylinder actuators designed for control and shut-off service.

The linkage bearings have material options. The robust cast-iron housing efficiently protects the mechanism from ambient dust and moisture.

The mounting face dimensions of the B1C actuator comply with the ISO 5211 standard.

The linkage converts the linear motion of the piston into rotation by the actuator shaft. The actuator generates maximum torque when for example a ball or butterfly valve is closed, and the need for torque is greatest. Another peak is achieved at 60-80°, when the need for torque on a butterfly valve caused by the dynamic forces of for example pipe flows reaches a maximum.

Screws are located in the upper end of the cylinder and in the lower end of the housing to regulate the length of the piston stroke and also the rotation angle of the actuator shaft.

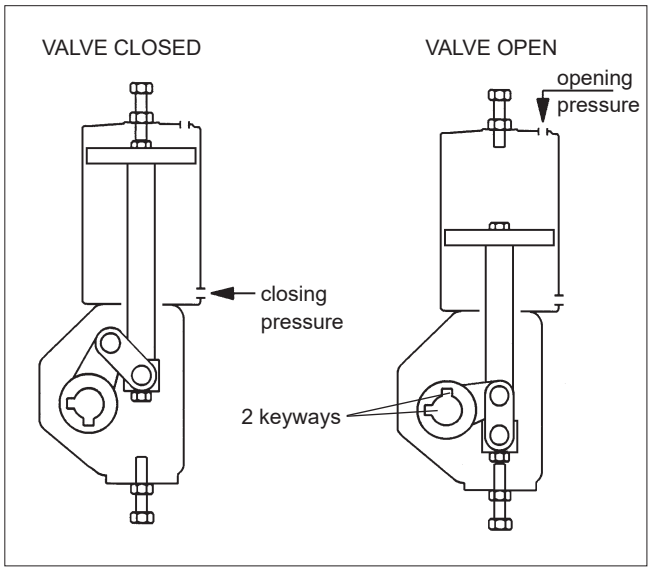

Fig. 1 Operating principle of the actuator

1.3 Actuator markings

The actuator is provided with an identification plate, see Fig. 2. Identification plate markings are:

1. Type
2. Manufacturing site, date, successive no. (bar code)
3. SO number or ID number (bar code)
4. Checked by
5. Max. supply pressure
6. ATEX category and protection level

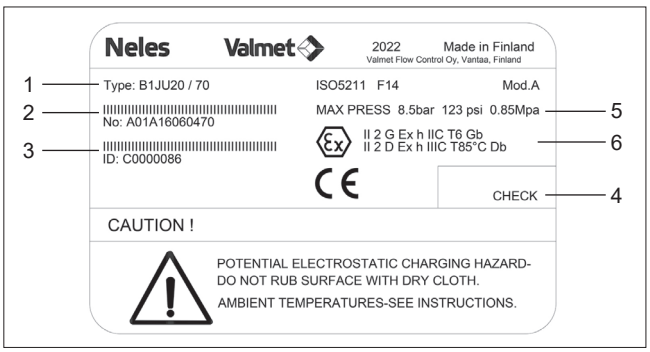

Fig. 2 ID plate

1.4 Specifications

Protection class:	IP66, NEMA 4X
Ambient temperatures:	
Standard design	-20° to 70 °C / -4° to 160 °F
Low temperature design	-40° to 70 °C / -40° to 160 °F
High temperature design	-20° to +120 °C / -4° to 250 °F
Arctic temperature design	-55° to +70 °C / -67° to 158 °F
Maximum supply pressure:	
B1C 6...17, 60, 602	8.5 bar / 120 psi
B1C 20...50, 502	10 bar / 145 psi
B1C 75, 752	5 bar / 70 psi
Stroke volume, dm³ / in³	
B1C 6	0.33 / 20
B1C 9	0.60 / 37
B1C 11	1.10 / 67
B1C 13	2.30 / 140
B1C 17	4.30 / 262
B1C 20	5.40 / 329
B1C 25	10.50 / 640
B1C 32	21 / 1280
B1C 40	43 / 2620
B1C 50	84 / 5130
B1C 60	121 / 7380
B1C 75	189 / 11500
B1C 502	195 / 11900
B1C 602	282 / 17200
B1C752	441 / 26900
Nominal torque, Nm / lbf ft (at max. supply pressure):	
B1C 6	135/100
B1C 9	260/190
B1C 11	480/355
B1C 13	1000/740
B1C 17	1900/1400
B1C 20	2700/2000
B1C 25	5300/3910
B1C 32	11000/8115
B1C 40	22000/16225
B1C 50	43000/31715
B1C 60	62000/45730
B1C 75	48000/35400
B1C 502	100000/73755
B1C 602	122000/89980
B1C 752	113000/83350

NB. The torque changes according to supply pressure.

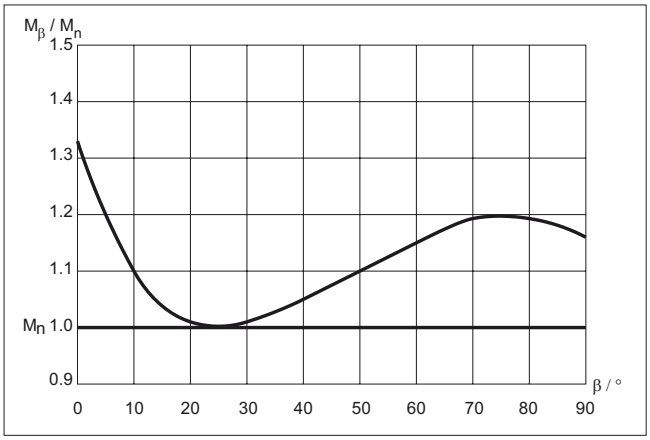

Fig. 3 Output torque as a function of turning angle

1.5 Recycling and disposal

Most actuator parts can be recycled if sorted according to material. Most parts have material marking. A material list is supplied with the actuator. In addition, separate recycling and disposal instructions are available from the manufacturer. An actuator can also be returned to the manufacturer for recycling and disposal against a fee.

1.6 Safety precautions

User Safety

CAUTION:
Don't exceed the permitted values!
Exceeding the permitted pressure value marked on the actuator may cause damage and lead to uncontrolled pressure release in the worst case. Damage to the equipment and personal injury may result.

CAUTION:
Don't dismantle a pressurized actuator!
Dismantling a pressurized actuator leads to uncontrolled pressure release. Shut off the supply pressure and release pressure from the cylinder before dismantling the actuator.
Otherwise, personal injury and damage to equipment may result.

CAUTION:
Beware of the cutting movement of the valve!
Hands, other parts of the body, tools or other objects must not be pushed into the valve's flow port while it is open. Also prevent foreign objects from entering the pipes. The valves function like a cutter while operating. Shut off and detach the supply of compressed air to the actuator during maintenance.
Otherwise, personal injury or damage to the equipment may result.

CAUTION:
Don't use the lever in the torsion arm for manual operation when the actuator is pressurized!
Shut off the supply pressure and release pressure from the cylinder before using the hand lever. Note also the dynamic torque caused by the pipe flow.
Otherwise, personal injury and damage to equipment may result.

CAUTION:
Don't leave the lever in the torsion arm after manual operation!
Leaving the lever in the torsion arm can cause personal injury or damage to the equipment.

CAUTION:
Take the weight of the actuator or valve combination into account when handling it!
Do not lift the valve combination from the actuator, positioner, limit switch or their piping. Lift the actuator as directed in Section 2, lifting ropes for a valve combination should be fastened around it. The weights are shown in Section 9. Dropping may result in personal injury or damage to the equipment.

ATEX/Ex Safety

CAUTION:
Potential electrostatic charging hazard, do not rub surface with dry cloth.

CAUTION:
Ensure the general process and worker protection from static electricity in the facilities.

NOTIFICATION:
The actual surface temperature of actuator is depended on the process and ambient conditions. The protection from high or low temperature must be considered by the end user before put into service.

2. TRANSPORTATION, RECEPTION AND STORAGE

Check the actuator and the accompanying devices for any damage that may have occurred during transport. Store the actuator carefully before installation, preferably indoors in a dry place. Do not take the actuator to the intended location and do not remove protection plugs from the pipe connections until the actuator is installed.

Lift the actuator as shown in Fig. 4: in a horizontal position from the stop screws. Horizontal lifting must be done by using two secure lifting slings, it is not permitted to lift the actuator with only one long lifting sling. Lifting in a vertical position from an eye bolt screwed in the place of a stop screw or from limit stop bolt with lifting tool (table 1). Do not use the eye bolt or lifting tool for lifting dual-cylinder actuators. Larger actuators have lifting hooks. Do not lift the valve-actuator assembly from actuator. If the actuator is equipped with a handwheel, it is not permitted to use it as a lifting point. Refer to Section 9 for weights. See section 9.5. for actuator center of gravity for planning the lifting safely.

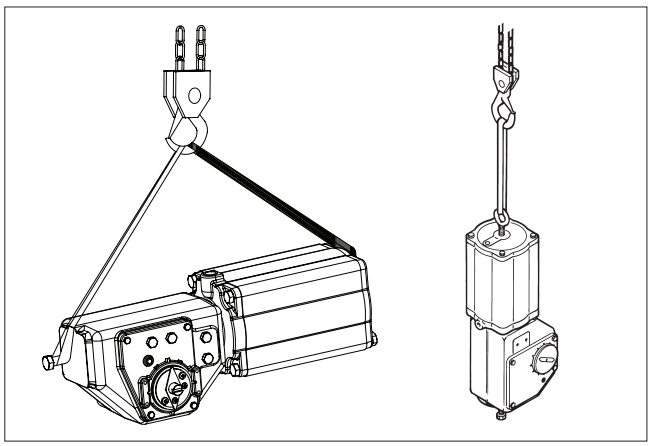

Fig. 4 Lifting the actuator

CAUTION:
Do not lift the valve-actuator assembly from actuator.

Table 1

Lifting tool	
Actuator size, Old model with imperial bolts	**Tool ID.**
BC 12-16 (BC 11) / BJ 8-10, UNC 5/8	H128479
BC 20 (BC 17) / BJ 12, UNC 3/4	H128480
BC 25 / BJ 16, UNC 1	H128481
BC 32 / BJ 20, UNC 1 1/4	H128482
BC 40 / BJ 25, UNC 1 1/2	H128483
BC 50 / BJ 32, UNC 1 3/3	H128484
Actuator size, Current model with metric bolts	**Tool ID.**
BC 6-13 / BJ 8-10 / M12 & M16	H096901
BC 17-25 / BJ 12-16 / M20 & M24	H096902
BC 32-50 / BJ 20-40 / M30 & M42	H096903

3. MOUNTING AND DEMOUNTING

3.1 Actuator gas supply

Dry compressed air or sweet natural gas or nitrogen can be used in double-acting cylinder actuators; an oil spray is not needed, nor recommended. Clean, dry and oil-free compressed air must be used in cylinder actuators equipped with a positioner.

See table below for recommended air quality values according to ISO 8573-1 for B1 actuator. Please note that instrumentation might have stricter requirements than actuator.

The air inlets are shown in the dimensional drawing in Section 9. The maximum permitted supply pressure is indicated on the identification plate. See also Section 1.4.

Recommended air quality	ISO 8573-1, class 3
Solid particle max size	40µm (ISO 8573-1, class 5)
Humidity	ISO 8573-1, class 1 (-20°C / dew point 10° below ambient temperature)
Oil class	3 (or < 1 ppm)

3.2 Mounting the actuator on the valve

CAUTION:
Take the weight of the actuator or valve combination into account when handling it!

CAUTION:
Beware of the cutting movement of the valve!

Install the actuator so that the shaft of the valve or any other device to be actuated goes into the shaft bore of the actuator. If the bore is larger than the shaft diameter, use a keyed shaft adapter sleeve or bushing. There are two keyway slots in the shaft bore of the actuator at an angle of 90°. These allow the installation position of the actuator to be changed in relation to the valve. Neles valves have a bevel at the end of their shafts to facilitate installation.

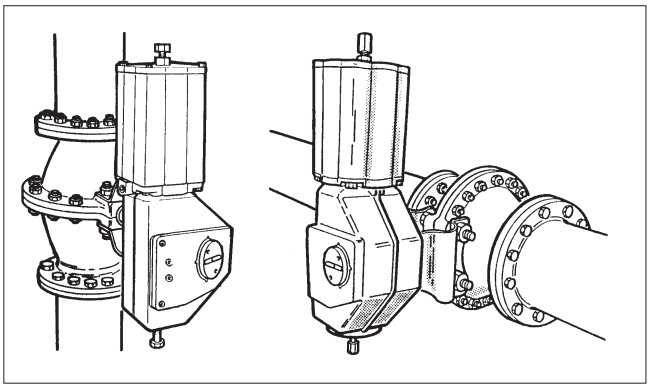

Fig. 5 Ways to install the actuator

The installation position can be chosen freely, although Valmet recommends one in which the cylinder is vertical. This is the best way to protect the actuator from impurities in the supply air or damage caused by water.

When you change the position of the actuator make certain the indicator arrow has been turned to a position corresponding to that of the valve.

When necessary, lubricate the shaft bore and bushing with Cortec VCI 369 or an equivalent anti-corrosive agent to prevent it from jamming due to rust.

The actuator must not touch the pipeline, because pipeline vibration may damage it or interfere with its operation.

In some cases, for instance when the actuator is exceptionally large, the valve has an extended stem or when there is lot of piping vibration, it may be advisable to support the actuator. Contact Valmet for more instructions.

There are two adjustable stop screws in the actuator; these stop the movement of the secondary shaft in the extreme positions. The actuator generates a torque of approximately 1.3 times the nominal torque when the piston is at the upper end of the cylinder, see also Fig. 3. For some valves, e.g. butterfly valve, the closing torque and position is accurate. The stop screw (26) at the cylinder end has to be adjusted according to right instructions, see separate valve specific instructions for more detailed information. An O-ring (33A) is used for sealing the stop screw in the cylinder end. See also the instructions of the valve.

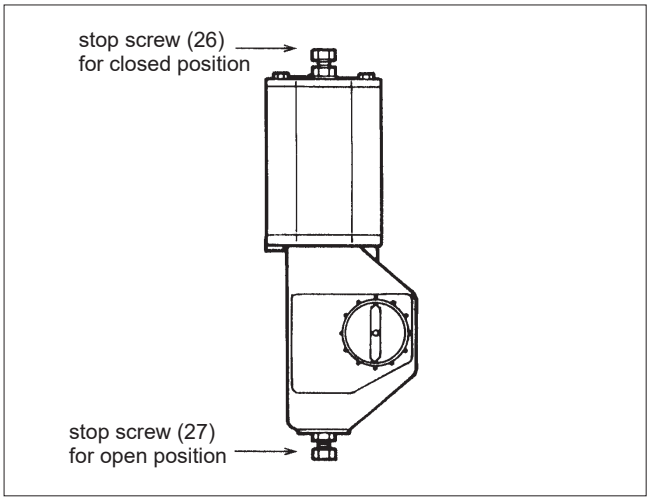

Fig. 6 The stop screws in the open and closed positions

3.3 Demounting the actuator from the valve

CAUTION:
Take the weight of the actuator or valve combination into account when handling it!

CAUTION:
When detaching actuator from valve, sudden release may take place due to friction on valve shaft - actuator bore connection.

CAUTION:
Beware of the cutting movement of the valve!

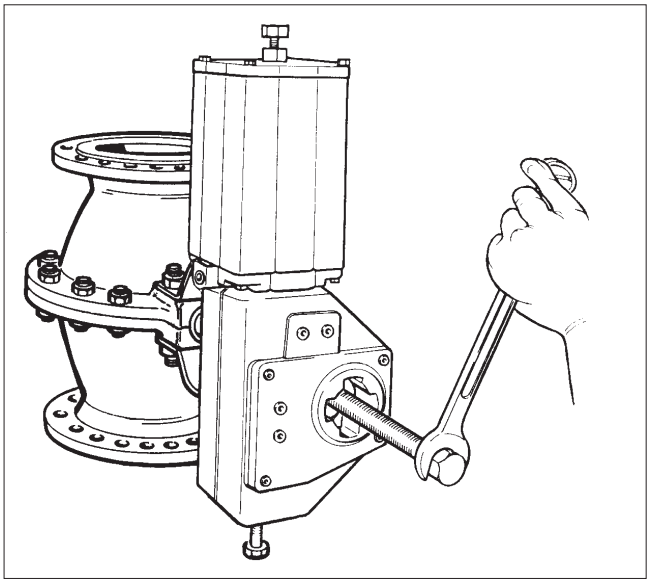

Fig. 7 Removing the actuator with the extractor

The actuator must be depressurized and the supply air pipes disconnected. Unscrew the actuator-side screws of the bracket and pull the actuator off the valve shaft. This is best done using a specific extractor, see Fig. 7 and Section 6. Note the mutual positioning of the valve and the actuator to ensure correct functioning after reassembly.

4. MAINTENANCE

4.1 Maintenance general

CAUTION:
Observe the safety precautions mentioned in Section 1.6 before maintenance!

Although Neles actuators are designed to work under severe conditions, proper preventative maintenance can significantly help to prevent unplanned downtime and in real terms reduce the total cost of ownership. Valmet recommends inspecting the actuators at least every five (5) years.

The inspection and maintenance interval depends on the actual application and process condition. The inspection and maintenance intervals can be specified together with your local Valmet experts.

During this periodic inspection the parts detailed in the Spare Part Set should be replaced. Time in storage should be included in the inspection interval.

Maintenance can be performed as presented below. If maintenance assistance is required, please contact your local Valmet office.

The part numbers in the text refer to the exploded view and to the parts list in Section 8, unless otherwise stated.

Under severely corrosive conditions, the linkage system inside the housing should be lubricated at six month intervals. Use Cortec VCI 369 anti-corrosive agent or the equivalent. The housing may also be half filled with semi-fluid water-repellant grease (e.g. Mobilux EP2) while the piston rod is in the lower position.

See appendix 2 for B1 series general lubrication instruction.
See appendix 3 for B1 super long-run option special lubrication instructions.

If you remove the stop screw, adjust the limits after lubrication or grease filling!

NOTE:
Repair and maintain actuator in a safe environment.

NOTE:
In order to ensure safe and effective operation, always use original spare parts to make sure that the actuator functions as intended.

NOTE:
In order to ensure safe and intended performance, remember to re-assemble all parts (e.g. 3a, 4a) as per original construction.

NOTE:
When sending goods to the manufacturer for repair, do not disassemble them.

NOTE:
For safety reasons, replace bolting if the threads are damaged, have been heated, stretched or corroded.

NOTE:
Before using chemicals, read Material Safety Data Sheet.

4.2 Replacement of piston seals

CAUTION:
Don't dismantle a pressurized actuator!

Replacement of all seals and soft bearings is recommended when the actuator has been disassembled for maintenance.

- Operate the actuator so that the piston goes to the outermost end of the cylinder. Release the pressure from the cylinder.
- Remove the cover of the housing (2).
- Loosen the fastening screw (29) of the bearing unit and the fastening screws of the cylinder (31) from the cylinder base (6). Should the piston turn with the screw (29), remove the end of the cylinder (44) and stop the turning with the piston fastening screw (28). See Figure 8.

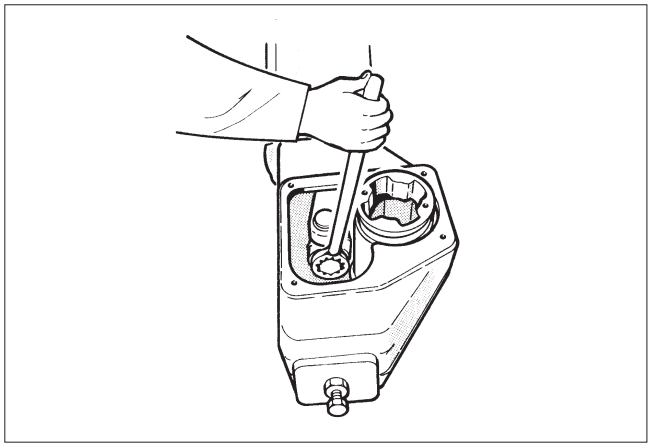

Fig. 8 Opening the fastening screw of the actuator bearing unit

- Remove the cylinder and the piston, including the rod.
- For large size actuators, see appendix 1 & 4 for safely lifting the piston out of the cylinder.
- Remove the old seals and the O-ring (24, 18, 19).
- Remove the O-rings (16, 16a) and the bearing (22). Clean the seal space.
- Lubricate the seal space and the new O-rings (16, 16a) with Unisilikon L250L or equal silicone grease. Install the new bearing (22) and O-rings (16, 16a). See Figure 9.

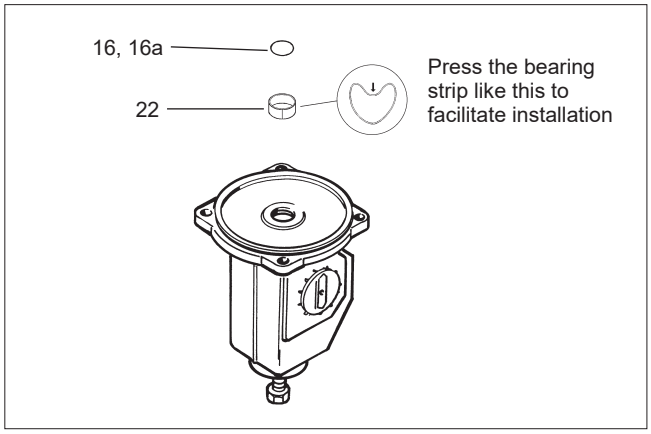

Fig. 9 Mounting the piston rod bearing and seal

- Clean the piston seal groove and lubricate with a thin layer of Cortec VCI 369.
- Place the O-ring (18) under the piston seals.
- Locate the seals (24) around the piston so that the ends of the strips come on opposite sides. Tighten the strips with the tie ring as shown in Figure 10. The strips marked with an asterisk (*) may be cut 1.5-3 mm shorter to facilitate assembly.

NOTE:
The inside surface of the cylinder must be free of any grease!

- Knock or press the piston through the tie ring with a press, Fig. 11.
- For large size actuators, see appendix 1 & 4 for safely lifting the piston back into the cylinder.
- Mount the O-ring (19) and the cylinder and piston. Note the location of the air inlet: use the air inlet of the cylinder base as a guide. Tighten the screws (31). See Table 2 for torques.
- Apply locking sealant e.g. Loctite 225 to the threads of the fastening screw (29) of the bearing unit and tighten it. See Table 2 for torque.
- Fasten the housing cover temporarily so that the linkage bearings (3) function, but the linkage is still visible, Fig. 12. Note the grounding rings (3A, 4A).

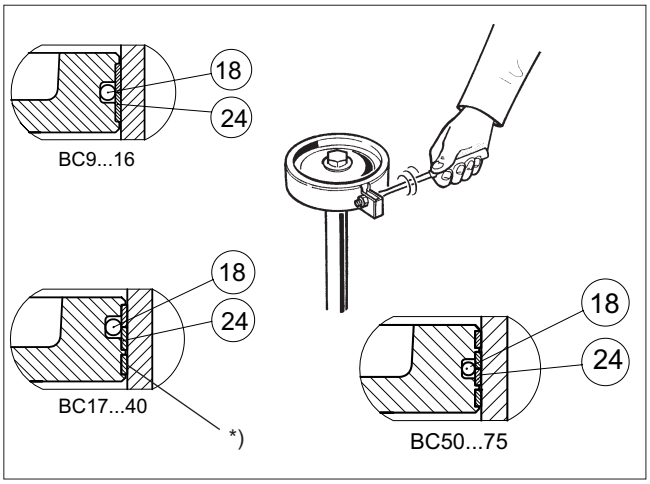

Fig. 10 Tightening piston seals with a tie ring

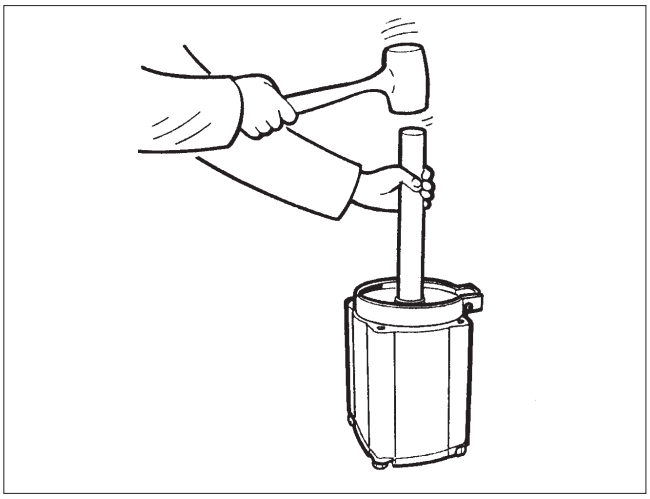

Fig. 11 Placing the piston in the cylinder

NOTE:
For large size actuators lifting tools are required during maintenance due to weight of components. Always plan how to lift safely. See appendix 1 for lifting safety.

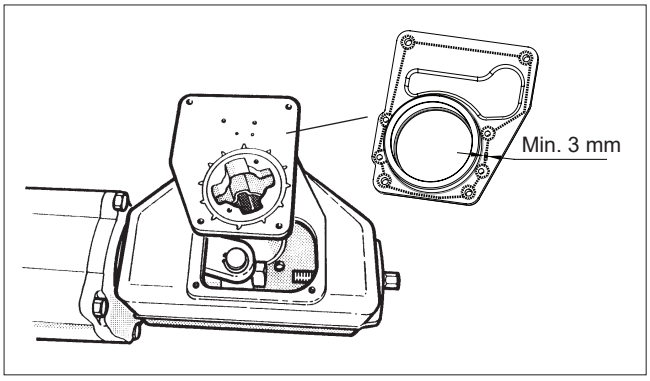

Fig. 12 Mounting the cover on the housing

CAUTION:
Keep your fingers, tools or other items out of the housing while operating the actuator with the cover open!

- Check the assembly of the cylinder to the cylinder base and end. Connect the supply air to the cylinder temporarely via a shut-off valve.
- Operate the actuator and check the function of the cylinder. Also check that the linkage bearings function properly. Remove the air supply and release pressure from the cylinder.
- Lubricate the linkage throughout with Cortec VCI 369 or an equivalent anti-corrosive agent to prevent it from jamming due to rust.
- Lubricate inside surfaces of the housing and cover throughout with Cortec VCI 369 anti-corrosive agent.
- Install new pressure outlet valve (58) on to housing cover.
- Clean housing and cover contact area. Apply proper amount (min. 3 mm diameter continuous path, as shown in Fig. 12) of sealant, e.g. silicone mass, to the interface between housing and cover.
- Mount the actuator to the valve and adjust the limits.

If you wish to remove the cylinder base, you will need a special tool to open the lock nut (35), see Section 6. The nut must be secured with e.g. Loctite 225 or equal liquid glue when remounted.

Table 2 Tightening torques for screws and nuts.

Torque, Nm							
Item	**28**	**29**	**30**	**31 / 45**	**33**	**34**	**35**
Actuator							
B1C 6	35	35	12	7	30	30	-
B1C 9	90	35	8	12	30	30	150
B1C 11	170	90	8	18	70	30	180
B1C 12	170	170	12	18	70	70	200
B1C 13	300	170	12	40	70	70	200
B1C 16	300	300	12	40	70	70	250
B1C 17	700	300	12	80	130	70	250
B1C 20	700	700	20	80	130	130	400
B1C 25	1100	1100	30	80	220	220	800
B1C 32	2000	2000	70	80	400	400	1500
B1C 40	2000	2000	70	200	1000	1000	2000
B1C 50	3400	3400	150	250	1000	1000	3000
B1C 60	3400	3400	150	250	1000	1000	3000
B1C 75	3400	3400	150	250	1000	1000	3000

4.3 Replacement of linkage bearings and X-rings

CAUTION:
Don’t dismantle a pressurized actuator!

- Remove the actuator from the valve
- Guide the actuator so that the piston is at the outermost end of the cylinder. Release the pressure from the cylinder.
- Remove the housing cover (2).
- Loosen the fastening screw (29) of the bearing unit (5), see Figure 8.
- Turn the lever (3) so that the bearing unit is detached from the piston rod (10). Lift the entire lever system out of the housing, Figure 13.

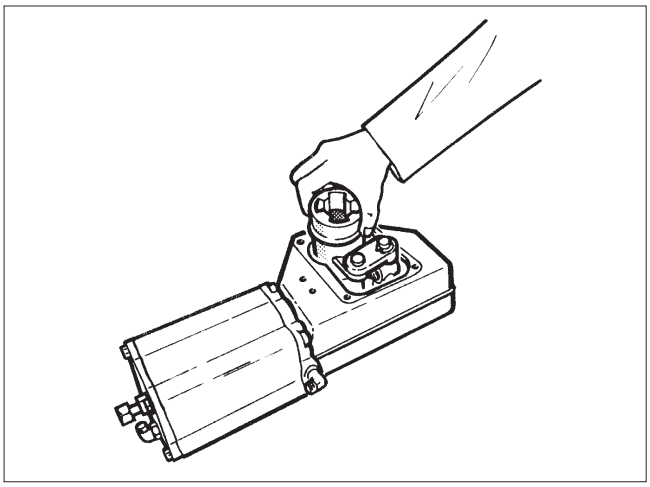

Fig. 13 Removing the linkage from the housing

- Remove the lock rings (36) and the support rings (37).
- Loosen the connection arms (4) and ring (4A), clean them and check the condition of the bearings, see Figure 14.

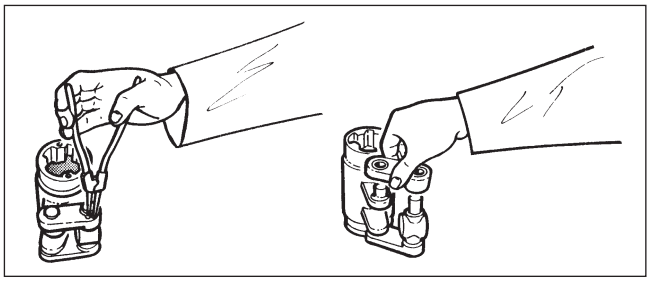

Fig. 14 Dismantling the linkage

The bearings (20, 21) of the connection arm (4) of actuators are fastened with a press-on fit so that the entire connection arm assembly is replaced instead of the bearings.

- Remove the lever bearings (23), the X-rings (17) and the grounding ring (3A).
- Clean the parts of the levers and lubricate the bearing and seal surfaces with Cortec VCI 369.
- Install the grounding ring (3A).
- Install the lever bearings (23). The bearing strip (23) has a chamfer on one side, which is meant to be facing upwards towards the housing cover, so that the chamfered side is in contact with the X-ring (17).

- Install the X-rings (17). The X-rings must not be twisted at any point. Make sure they are placed evenly and uniformly around the whole lever arm surface. On the housing cover side the X-ring (17) will fit only if installed together with a chamfered bearing strip (23).
- Assemble the linkage and install in the housing. See Figure 13 for the correct position. Note that there are 2 pieces of grounding ring (4A) needed under the connection arm. All grounding rings (3A and 4A) are needed to meet the ATEX requirements.
- Apply locking sealant e.g. Loctite 2400, 242 or 225 to the threads of the fastening screw (29) of the bearing unit and tighten it. See Table 2 for torque.
- Lubricate the linkage throughout with Cortec VCI 369 anti-corrosive agent.
- Lubricate inside surfaces of the housing and cover throughout with Cortec VCI 369 anti-corrosive agent.
- Install new pressure outlet valve (58) on to housing cover.
- Clean housing and cover contact area. Apply proper amount (min. 3 mm diameter continuous path, as shown in Fig. 12) of sealant, e.g. silicone mass, to the interface between housing and cover.
- Operate the actuator and check that it moves correctly.

Cortec VCI 369 must be applied at six-month intervals in damp conditions where corrosion is likely. Grease filling the housing should also be considered. See Section 4.1.

4.4 Maintenance of a B1CM actuator

CAUTION:
Don't use the lever in the torsion arm for manual operation when the actuator is pressurized!

CAUTION:
Don't leave the lever in the torsion arm after manual operation!

The structure of the B1CM actuator is the same, except for the manual operation lever connected with lever arm (3). See the exploded view, Section 8.

Maintenance as in Sections 4.1 and 4.2.

4.5 Maintenance of B1C502-752 actuators

The structure of the B1C502-752 actuators is in principle the same as a normal B1C actuator. In order to ensure a high operating torque, the equipment is fitted with two cylinders connected to the secondary shaft.

The double cylinder actuator's gearbox is equipped with lifting lugs, which are designed only for actuator lifting. It is not permitted to lift the valve-actuator combination from the actuator only.

For maintenance see Sections 4.1 and 4.2.

NOTE:
For double cylinder actuators lifting tools are required during maintenance due to weight of components. Always plan how to lift safely. See appendix 1 for lifting safety.

5. MALFUNCTIONS

Table 6 lists malfunctions that might occur after prolonged use.

6. TOOLS

For maintenance of the actuator, you will need a few special tools in addition to the usual ones. The following can be ordered from the manufacturer:

- For actuator removal:
  - Extractor (Table 3)
- For piston seal installation:
  - Tie ring (Table 4)
- For cylinder base removal:
  - Lock nut key (Table 5)
- For piston lifting tools:
  - see appendix 4

Table 3 Extractor tools

Actuator size	Tool ID.
BC/BJ 6	303821
BC 9-11 / BJ 8-10	8546-1
BC 13-17 / BJ 12-16	8546-2
BC/BJ 20	8546-3
BC/BJ 25	8546-4
BC/BJ 32	8546-5
BC 40 / BJ 322	8546-6
BC 50	8546-7
BC 502	8546-8

Table 4 Mounting Collars

Actuator size	Tool ID.
BC 6-8 / BJ 6	7814-1
BC 9	7814-2
BC 11 / BJ 8	7814-3
BC 13 / BJ 10	7814-4
BC 17-20 / BJ 12	7814-5
BC 25 / BJ 16	7814-6
BC 32 / BJ 20	7814-7
BC 40 / BJ 25	7814-8
BC 50, 502 / BJ 32, 322	7814-9
BC 60, 602 cylinder Ø 600	7814-10
BC 75, 752	7814-11

Table 5 Shaft nut tools

Actuator size	Tool ID.
BC/BJ 8	260155
BC 11 / BJ 10	260156
BC 13 / BJ 12	260157
BC 17 / BJ 16	260172
BC/BJ 20	260196
BC/BJ 25	260195
BC 32 / BJ 32, 322	261153
BC 40	261154
BC 50, 502	261155

7. ORDERING SPARE PARTS

NOTE:
Only use spare parts provided by Valmet Flow Control to ensure proper functioning of the actuator.

When ordering spare parts, always include the following information:

- type code, sales order number, serial number
- number of the parts list, part number, name of the part and quantity required

This information can be found from the identification plate or documents.

NOTE:
All spare parts between the new B1 actuator model “B” and the earlier model “A” are interchangeable, but please use only model A or model B spare part kit as a complete package to ensure proper maintenance.

Only the model “B” soft spare parts are now provided from Valmet Flow Control, because they provide increased tightness and endurance for the B1 actuator.

Table 6 Possible malfunctions

Symptom	Possible cause	Action
Irregular or slow operation	Low supply pressure	Make sure that supply pressure complies with minimum torque required by valve. Check that supply air pipes are large enough.
	Positioner malfunction	Check the operation of the positioner.
	Valve malfunction	Check that valve functions properly without actuator.
	Wrong size actuator	Contact the manufacturer for checking the size.
	Leak in piston or piston rod seal	Replace seals. See Section 4.1.
	Cylinder damaged by impurities	Note installation position recommendation. Cylinder damage always requires replacement.
	Worn-out actuator bearings	Check condition of bearings in accordance with Section 4.2. Replace the bearings if necessary. If the frequency of operation is high, the bearings and piston seals should be replaced at regular intervals.
	Linkage rusted in difficult damp conditions	Clean the linkage and replace the bearings. Lubricate the housing regularly and apply grease as in Section 4 .1.
	The fastening screw in the bearing unit is loose	Tighten screw. Lock with Loctite 225 or equal liquid glue.
	Play in the joint between actuator and valve	Replace necessary parts.

8. EXPLODED VIEWS AND PARTS LISTS

8.1 Actuators B1C 6

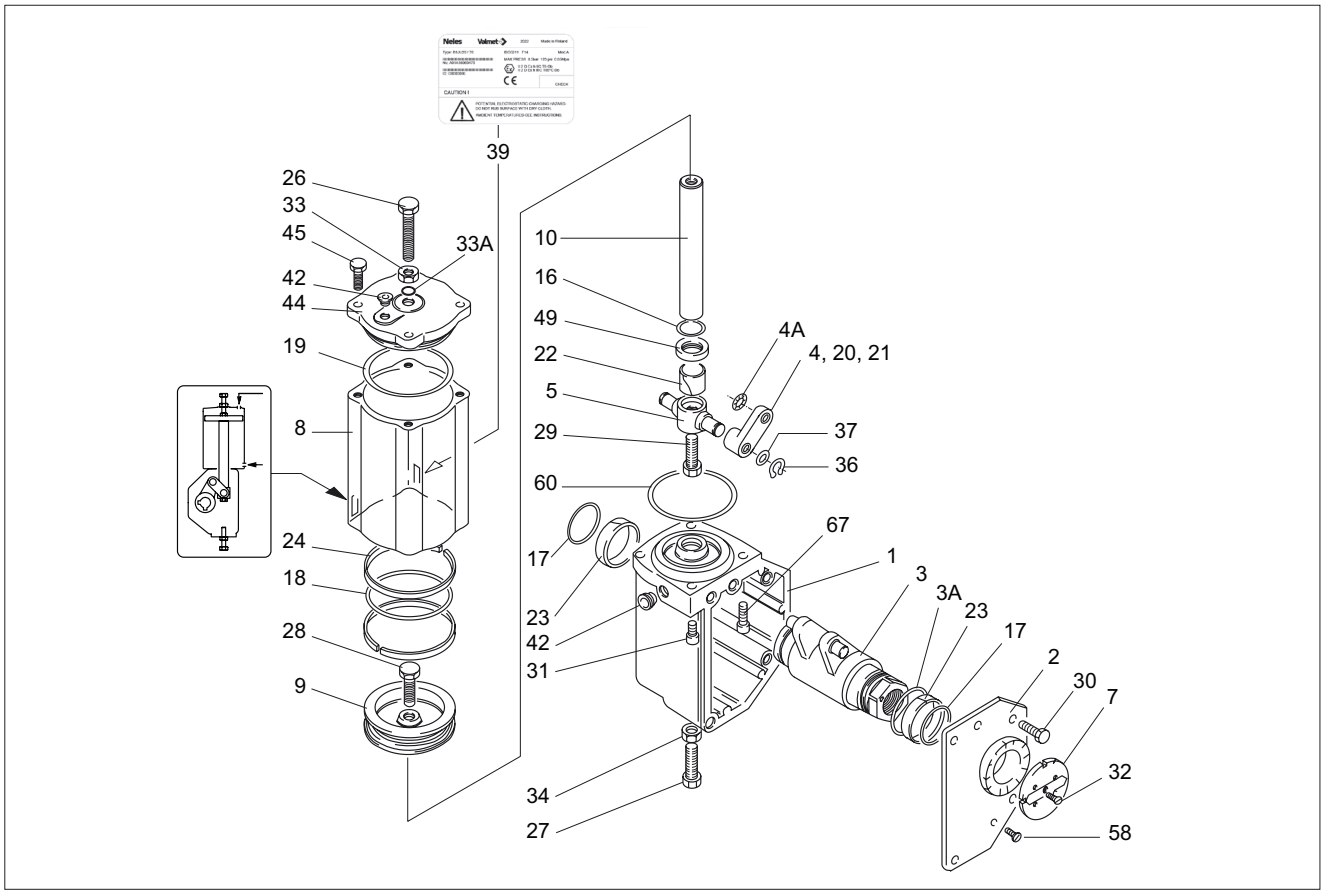

Item	Qty	Description	Spare part category
1	1	Housing	
2	1	Cover	
3	1	Lever arm	2 **
3A	1	Antistatic ring	2 **
4	2	Connection arm	2 **
4A ***	1	Antistatic ring	2 **
5	1	Bearing unit	2 **
7	1	Pointer cover	
8	1	Cylinder	3
9	1	Piston	
10	1	Piston rod	
16	1	O-ring	1 *
17	2	X-ring	1 *
18	1	O-ring	1 *
19	1	O-ring	1 *
20	2	Bearing	2 **
21	2	Bearing	2 **
22	1	Bearing	1 *
23	2	Bearing	1 *
24	2	Piston seal	1 *
26	1	Stop screw	3 ***
27	1	Stop screw	3 ***
28	1	Screw	

Item	Qty	Description	Spare part category
29	1	Screw	
30	1	Screw	
31	3	Screw	
32	2	Screw	
33	1	Nut	3 ***
33A	1	O-ring	1 *
34	1	Nut	3 ***
36	2	Lock ring	(**)
37	2	Support ring	(**)
39	1	ID plate	
42	2	Plug	
44	1	Cylinder end	
45	4	Screw	
49	1	Bushing	
58	1	Pressure outlet valve	1 *
60	1	O-ring	
62	1	Screw	
67	1	Screw	

*) Delivered as a set
**) Leverage assembly, also available as separate part.
Parts 20 and 21 are not available separately. They are delivered with part 4 as a set only.
(**) Belongs to leverage assembly, not recommended as separate part
***) With long-run option

Spare part set category 1: Recommended soft parts for inspection and maintenance (to be replaced always after disassembling the actuator)
Spare part category 2: Leverage repair
Spare part category 3: Complete overhaul (for complete overhaul parts of all 3 categories are needed)

8.2 Actuators B1C 9-32

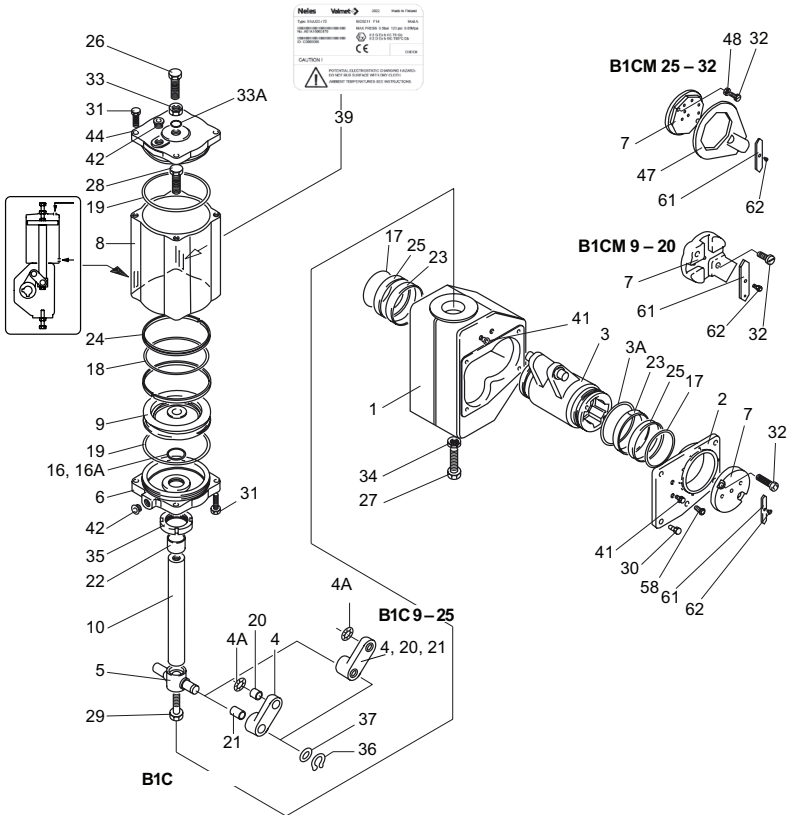

B1CU_/_A
Parts for Arctic temperature design model B1C_/_A.
Special items with circled numbers.

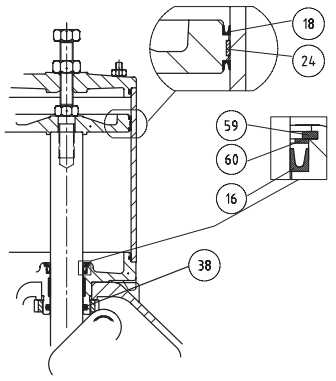

B1CU_/_A
Arctic design special items: 16, 18, 24, 38, 59 and 60.(*

Item	Qty	Description
16	1	Lip-seal
18	2	Lip-seal
24	1	Piston ring
38	1	O-ring
59	1	Retainer ring
60	1	Spacer ring

Item	Qty	Description	Spare part category
1	1	Housing	
2	1	Cover	
3	1	Lever arm	2 **
3A	1	Antistatic ring	2 **
4	2	Connection arm	2 **
4A ***	1	Antistatic ring	2 **
5	1	Bearing unit	2
6	1	Cylinder base	
7	1	Pointer cover	
8	1	Cylinder	3
9	1	Piston	
10	1	Piston rod	
16	1	O-ring	1 *
16A	1	O-ring	1 *
17	2	X-ring	1 *
18	1	O-ring	1 *
19	2	O-ring	1 *
20	2	Bearing	2 ** (size 32: 1 *)
21	2	Bearing	2 ** (size 32: 1 *)
22	1, 2	Bearing	1 *
23	2	Bearing	1 *
24	2, 3	Piston seal	1 *
25	2	Bushing	3
26	1	Stop screw	3 ***
27	1	Stop screw	3 ***

Item	Qty	Description	Spare part category
28	1	Screw	
29	1	Screw	
30	4	Screw	
31	8, 12	Screw	
32	2	Screw	
33	1	Nut	3 ***
33A	1	O-ring	1 *
34	1	Nut	3 ***
35	1	Lock nut	
36	2	Lock ring	(**)
37	2	Support ring	(**)
39	1	ID plate	
41		Plug	
42		Plug	
44	1	Cylinder end	
47	1	Torsion arm	
48	2	Washer	
58	1	Pressure outlet valve	1 *
61	1	Direction arrow	
62	1	Screw	

*) Delivered as a set
**) Leverage assembly, also available as separate part.
Actuator sizes 9–25: Parts 20 and 21 are not available separately.
They are delivered with part 4 as a set only.
(**) Belongs to leverage assembly, not recommended as separate part
***) With long-run option

Spare part set category 1: Recommended soft parts for inspection and maintenance (to be replaced always after disassembling the actuator)
Spare part category 2: Leverage repair
Spare part category 3: Complete overhaul (for complete overhaul parts of all 3 categories are needed)

8.3 Actuators B1C 40-75

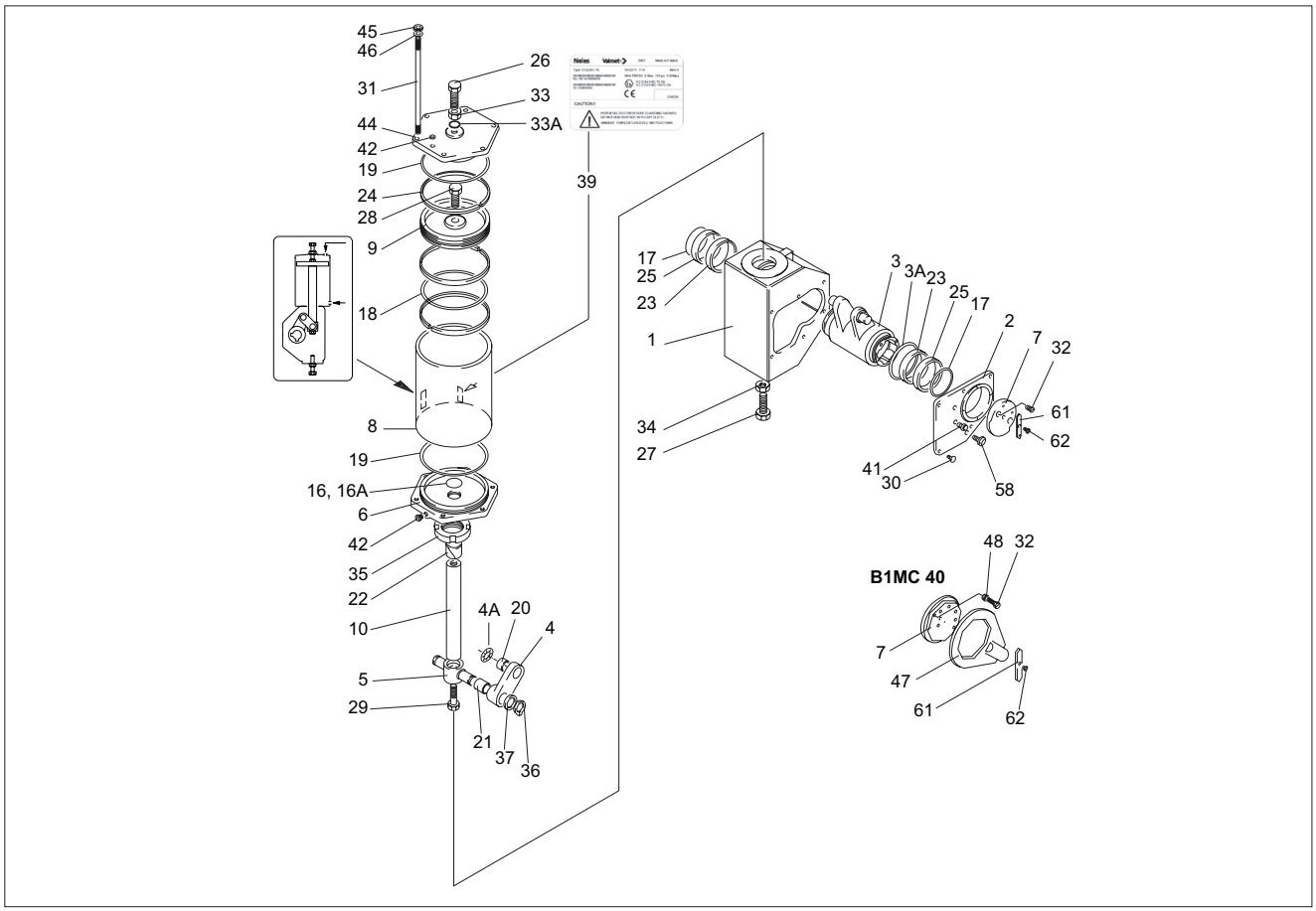

Item	Qty	Description	Spare part category
1	1	Housing	
2	1	Cover	
3	1	Lever arm	2 **
3A	1	Antistatic ring	2 **
4	2	Connection arm	2 **
4A	1	Antistatic ring	2 **
5	1	Bearing unit	2 **
6	1	Cylinder base	
7	1	Pointer cover	
8	1	Cylinder	3
9	1	Piston	
10	1	Piston rod	
16	1	O-ring	1 *
16A	1	O-ring	1 *
17	2	X-ring	1 *
18	1	O-ring	1 *
19	2	O-ring	1 *
20	2	Bearing	1 *
21	2	Bearing	1 *
22	2	Bearing	1 *
23	2	Bearing	1 *
24	3, 4	Piston seal	1 *
25	2	Bushing	3
26	1	Stop screw	3 ***
27	1	Stop screw	3 ***

Item	Qty	Description	Spare part category
28	1	Screw	
29	1	Screw	
30	6	Screw	
31	6	Stud	
32	2	Screw	
33	1	Nut	3 ***
33A	1	O-ring	1 *
34	1	Nut	3 ***
35	1	Lock nut	
36	2	Lock ring	(**)
37	2	Support ring	(**)
39	1	ID plate	
41		Plug	
42		Plug	
44	1	Cylinder end	
45	6	Nut	
46	6	Washer	
47	1	Torsion arm	
48	2	Washer	
58	1	Pressure outlet valve	1 *
61	1	Direction arrow	
62	1	Screw	

*) Delivered as a set
**) Leverage assembly, also available as separate part
(**) Belongs to leverage assembly, not recommended as separate part
***) With long-run option

Spare part set category 1: Recommended soft parts for inspection and maintenance (to be replaced always after disassembling the actuator)
Spare part category 2: Leverage repair
Spare part category 3: Complete overhaul (for complete overhaul parts of all 3 categories are needed)

8.4 Actuators B1C 502-752

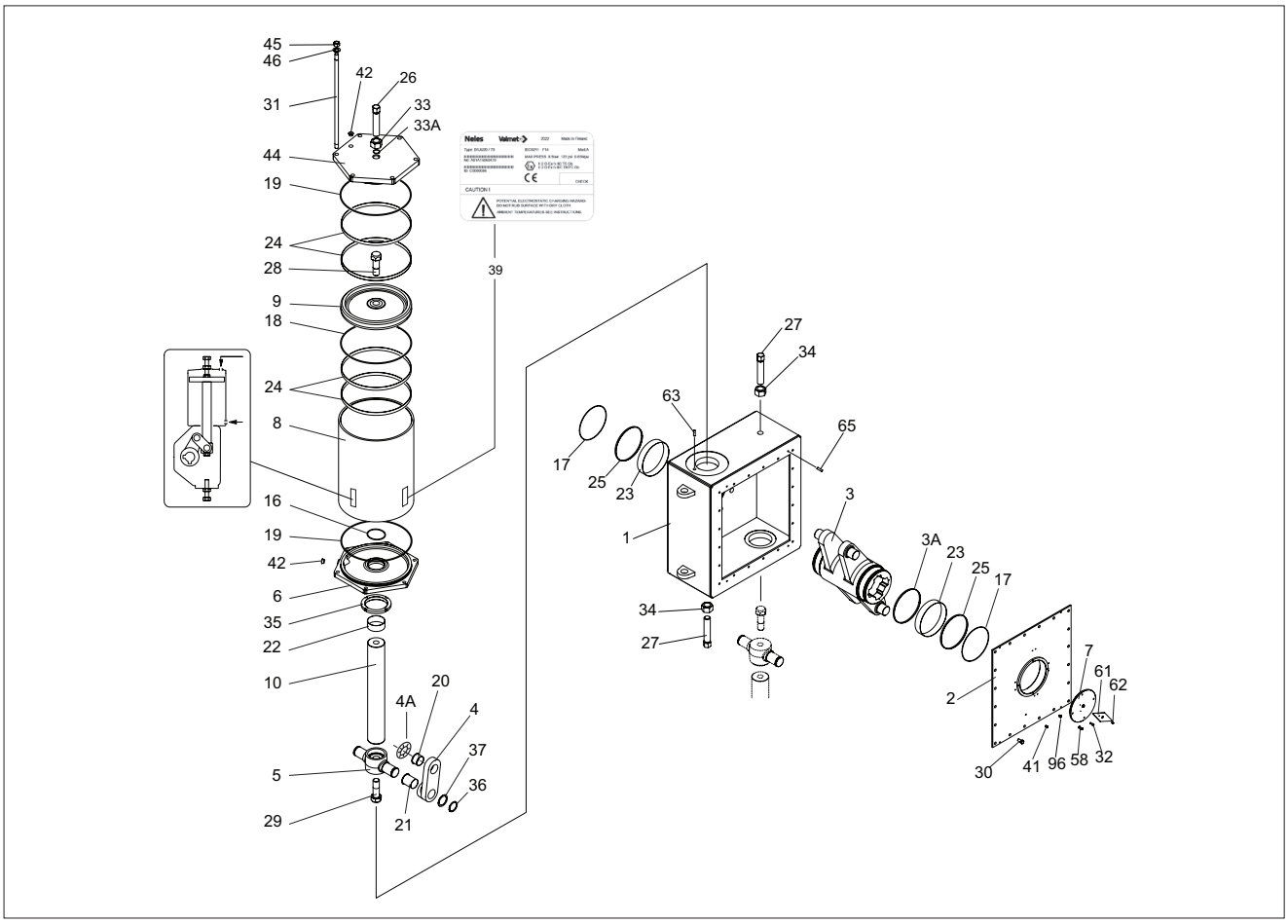

Item	Qty	Description	Spare part category
1	1	Housing	
2	1	Cover	
3	1	Lever arm	2 **
3A	1	Antistatic ring	2 **
4	4	Connection arm	2 **
4A	1	Antistatic ring	2 **
5	2	Bearing unit	2 **
6	2	Cylinder base	
7	1	Pointer cover	
8	2	Cylinder	3
9	2	Piston	
10	2	Piston rod	
16	2	O-ring	1 *
17	2	X-ring	1 *
18	2	O-ring	1 *
19	4	O-ring	1 *
20	4	Bearing	1 *
21	4	Bearing	1 *
22	4	Bearing	1 *
23	2	Bearing	1 *
24	8	Piston seal	1 *
25	2	Bushing	3
26	2	Stop screw	3 ***
27	2	Stop screw	3 ***
28	2	Screw	

Item	Qty	Description	Spare part category
29	2	Screw	
30	20	Screw	
31	12	Stud	
32	2	Screw	
33	2	Nut	3 ***
33A	2	O-ring	1 *
34	2	Nut	3 ***
35	2	Lock nut	
36	4	Lock ring	(**)
37	4	Support ring	(**)
39	1	ID plate	
41	4	Plug	
42	4	Plug	
44	2	Cylinder end	
45	12	Nut	
46	12	Washer	
58	1	Pressure outlet valve	1 *
61	1	Direction arrow	
62	2	Screw	
63	2	Pin	
65	4	Pin	
96	4	Screw	

*) Delivered as a set
**) Leverage assembly, also available as separate part
(**) Belongs to leverage assembly, not recommended as separate part
***) With long-run option

Spare part set category 1: Recommended soft parts for inspection and maintenance (to be replaced always after disassembling the actuator)
Spare part category 2: Leverage repair
Spare part category 3: Complete overhaul (for complete overhaul parts of all 3 categories are needed)

9. DIMENSIONS AND WEIGHTS

9.1 Actuator B1C

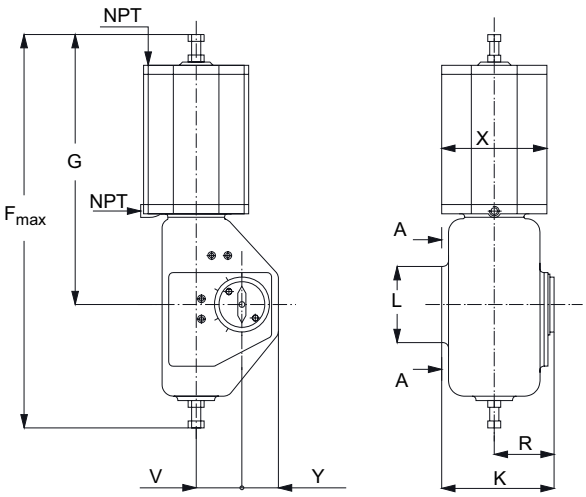

Type	Dimensions, mm										NPT	kg
	X	G	F	V	Y	L	K*	K1	R*	R1		
B1C6	90	270	395	36	46	70	138	138	80	80	1/4	4.2
B1C9	110	315	450	43	50	80	130	140	72	81	1/4	9.6
B1C11	135	375	535	51	50	95	144	154	80	89	3/8	16
B1C13	175	445	640	65	65	117	175	190	94	109	3/8	31
B1C17	215	555	785	78	70	137	207	222	111	126	1/2	54
B1C20	215	590	880	97	80	142	240	262	125	147	1/2	73
B1C25	265	725	1075	121	110	176	300	304	162	166	1/2	131
B1C32	395	920	1370	153	146	280	376	379	201	204	3/4	256
B1C40	505	1150	1670	194	185	335	449	449	224	224	3/4	446
B1C50	610	1390	2060	242	195	410	541	543	266	268	1	830
B1C60	725	1390	2060	242	195	410	541	543	266	268	1	1080
B1C75	875	1390	2060	242	195	410	541	543	266	268	1	1190

Type	Dimensions, in										NPT	lb
	X	G	F	V	Y	L	K*	K1	R*	R1		
B1C6	3.54	10.60	15.60	1.42	1.81	2.76	5.43	5.43	3.15	3.15	1/4	9
B1C9	4.33	12.40	17.70	1.69	1.97	3.15	5.12	5.51	2.83	3.19	1/4	21
B1C11	5.31	14.80	21.10	2.01	1.97	3.74	5.67	6.06	3.15	3.50	3/8	35
B1C13	6.89	17.50	25.20	2.56	2.56	4.60	6.89	7.48	3.70	4.29	3/8	68
B1C17	8.46	21.90	30.90	3.07	2.76	5.39	8.15	8.74	4.37	4.96	1/2	119
B1C20	8.46	23.20	34.70	3.82	3.15	5.59	9.45	10.31	4.92	5.79	1/2	161
B1C25	10.43	28.50	42.30	4.76	4.33	6.93	11.81	11.97	6.38	6.54	1/2	289
B1C32	15.55	36.20	53.90	6.02	5.75	11.0	14.80	14.92	7.91	8.03	3/4	564
B1C40	19.88	45.30	65.70	7.64	7.28	13.19	17.68	17.68	8.82	8.82	3/4	983
B1C50	24.02	54.70	81.10	9.53	7.68	16.14	21.30	21.38	10.47	10.55	1	1829
B1C60	28.54	54.70	81.10	9.53	7.68	16.14	21.30	21.38	10.47	10.55	1	2380
B1C75	34.45	54.70	81.10	9.53	7.68	16.14	21.30	21.38	10.47	10.55	1	2620

*) Dimensions K and R are for Neles accessories interface.
Dimensions K1 and R1 are for VDI/VDE 3845 interface (type code “U”).

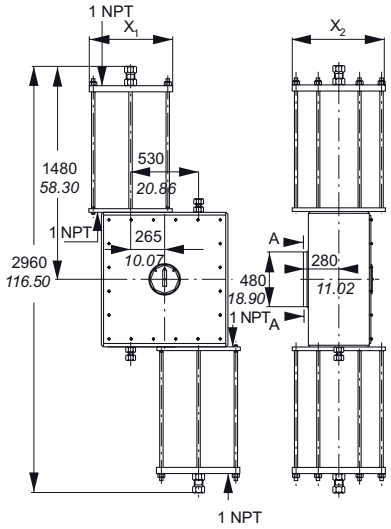

Type	Dimensions, mm		Weight kg	Dimensions, in		Weight lb
	X1	X2		X1	X2	
502	540	610	1665	21.3	24.0	3663
602	635	725	2170	25.0	28.5	4780
752	813	875	2300	32.0	34.5	5070

9.2 Attachment dimensions

DIRECTION A - A

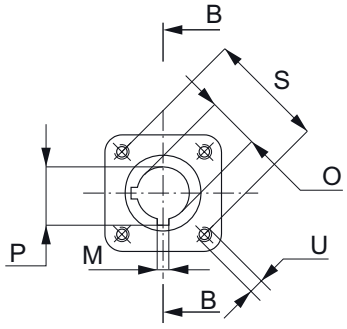

B1C6...25

DIRECTION A - A

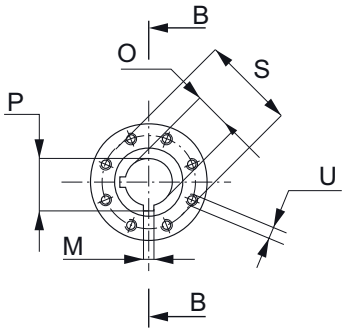

B1C32...752

DIRECTION B - B

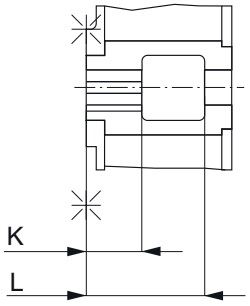

B1C	Dimensions, mm								Mounting face
	O (H8)	M	P	K (keyway)	L	S	U	N	
6	15 20 25	4.76 4.76 6.35	17.0 23.3 27.9	40	90	50	M6	4	F05
6	15 20 25	4.76 4.76 6.35	17.0 23.3 27.9	40	90	70	M8	4	F07
9	15 20 25 35	4.76 4.76 6.35 9.52	17.0 23.3 27.9 39.3	50	90	70	M8	4	F07
11	20 25 35 40	4.76 6.35 9.52 9.52	23.3 27.9 39.3 44.4	60	105	102	M10	4	F10
13	55	12.70	60.8	75	130	125	M12	4	F12
17	55	12.70	60.8	80	160	140	M16	4	F14
20	70	19.05	78.3	105	195	140	M16	4	F14
25	95	22.22	105.5	140	235	165	M20	4	F16
32	105	25.40	116.3	155	280	254	M16	8	F25
40	95 105 120	22.22 25.40 31.75	105.5 116.3 133.9	180	340	298	M20	8	F30
50 60 75	120 135	31.75 31.75	133.9 149.2	200	430	356	M30	8	F35
502 602 752	120 135 150 165 180	31.75 31.75 31.75 38.10 44.45	133.9 149.2 166.8 182.0 199.4	250	470	406	M36	8	F40

B1C	Dimensions, in								Mounting face
	O (H8)	M	P	K (keyway)	L	S	U	N	
6	0.59 0.79 0.98	0.19 0.19 0.25	0.67 0.92 1.10	1.57	3.54	1.97	M6	4	F05
6	0.59 0.79 0.98	0.19 0.19 0.25	0.67 0.92 1.10	1.57	3.54	2.76	M8	4	F07
9	0.59 0.79 0.98 1.38	0.19 0.19 0.25 0.37	0.67 0.92 1.10 1.55	1.97	3.54	2.76	M8	4	F07
11	0.79 0.98 1.38 1.57	0.19 0.25 0.37 0.37	0.92 1.10 1.55 1.75	2.36	4.13	4.02	M10	4	F10
13	2.17	0.50	2.39	2.95	5.12	4.92	M12	4	F12
17	2.17	0.50	2.39	3.15	4.72	5.51	M16	4	F14
20	2.76	0.75	3.08	4.13	7.68	5.51	M16	4	F14
25	3.74	0.87	4.15	5.51	9.25	6.50	M20	4	F16
32	4.13	1.00	4.58	6.10	11.02	10.00	M16	8	F25
40	3.74 4.13 4.72	0.87 1.00 1.25	4.15 4.58 5.27	7.09	13.39	11.73	M20	8	F30
50 60 75	4.72 5.31	1.25 1.25	5.27 5.87	7.87	16.93	14.02	M30	8	F35
502 602 752	4.72 5.31 5.91 6.50 7.09	1.25 1.25 1.25 1.50 1.75	5.27 5.87 6.57 7.17 7.85	9.84	18.50	15.98	M36	8	F40

9.3 Center of gravity

For lifting safety: below is provided information about center of gravity of B1C series actuators.

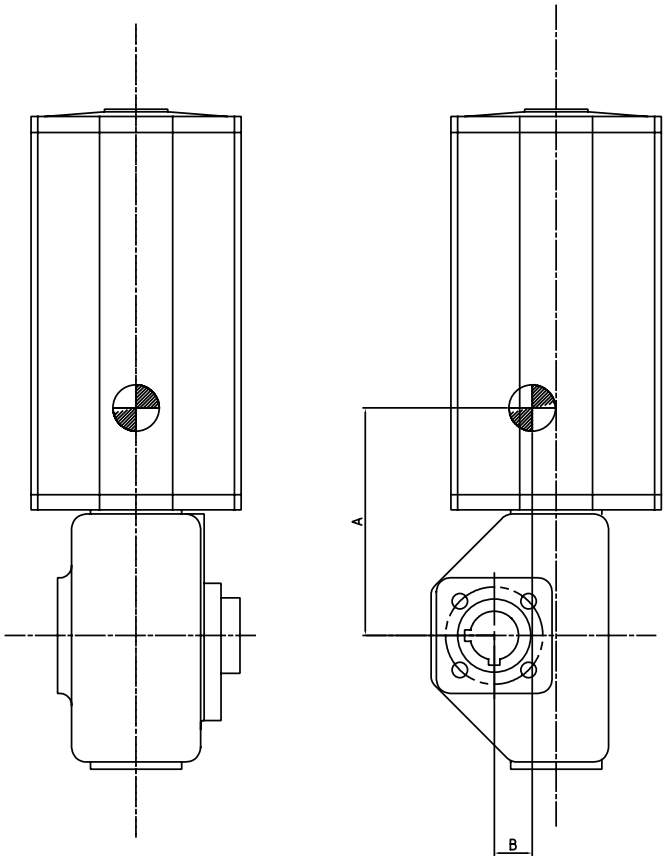

ALUMINIUM CYLINDER

BC	A	B	W/Kg
BC 6	70	20	4
BC 9	58	29	10
BC 11	86	36	16
BC 13	139	48	31
BC 17	180	58	54
BC 20	142	67	73
BC 25	177	85	131
BC 32	210	103	256
BC 40	274	132	446
BC 50	376	168	830
BC 60	463	207	990
BC 75	500	213	1120
BC 502	0	0	2050
BC 602	0	0	2408
BC 752	0	0	2779

STEEL CYLINDER

BCS	A	B	W/Kg
BCS 9	66	30	10
BCS 11	95	37	17
BCS 13	143	49	32
BCS 17	188	60	57
BCS 20	150	68	76
BCS 25	186	86	136
BCS 32	216	104	262
BCS 40	306	138	483
BCS 50	409	173	905
BCS 60	495	208	1100
BCS 75	533	215	1256
BCS 502	0	0	2162
BCS 602	0	0	2558
BCS 752	0	0	3040

ALUMINIUM CYLINDER

BCH	A	B	W/Kg
BHC 11	10	41	24
BCH 13	76	51	39
BCH 17	97	62	67
BCH 20	78	72	86
BCH 25	104	88	144
BCH 32	133	109	288
BCH 40	219	138	478
BCH 50	339	171	862
BCH 60	429	208	1022
BCH 75	469	214	1152
BCH 502	0	0	2114
BCH 602	0	0	2472
BCH 752	0	0	2843

BCR/RR	A	B	W/Kg
BCR 9	74	37	20
BCR 11	92	40	23
BCR 13	136	51	37
BCR 17	177	60	60
BCR 20	143	70	80
BCR 25	160	90	150
BCRR 32	212	107	280
BCRR 40	275	136	470
BCRR 50	376	170	854
BCRR 60	461	208	1014
BCRR 75	499	214	1144

BCL/RL	A	B	W/Kg
BCL 9	-9	35	17
BCL 11	20	39	19
BCL 13	95	50	34
BCL 17	150	59	57
BCL 20	116	68	77
BCL 25	102	87	141
BCRL 32	183	105	268
BCRL 40	255	134	458
BCRL 50	363	169	842
BCRL 60	451	207	1002
BCRL 75	489	213	1132

BCK/RK BCK 9	A 148	B 22	W/Kg 17
BCK 11	160	24	19
BCK 13	180	23	34
BCK 17	207	30	57
BCK 20	169	45	77
BCK 25	234	43	141
BCRK 32	240	48	268
BCRK 40	294	63	458
BCRK 50	389	73	842
BCRK 60	473	142	1002
BCRK 75	510	184	1132

STEEL CYLINDER

BCSH	A	B	W/Kg
BCSH 11	19	41	25
BCSH 13	81	52	40
BCSH 17	107	63	70
BCSH 20	87	72	89
BCSH 25	115	89	149
BCSH 32	140	109	294
BCSH 40	253	143	515
BCSH 50	373	175	937
BCSH 60	463	209	1132
BCSH 75	504	216	1288

BCSR/RR	A	B	W/Kg
BCSR 9	78	37	23
BCSR 11	98	41	25
BCSR 13	139	52	38
BCSR 17	184	62	63
BCSR 20	150	70	83
BCSR 25	168	90	155
BCSRR 32	218	108	286
BCSRR 40	305	142	507
BCSRR 50	408	175	929
BCSRR 60	492	209	1124
BCSRR 75	531	216	1280

BCSL/RL	A	B	W/Kg
BCSL 9	-5	35	17
BCSL 11	31	39	20
BCSL 13	100	50	35
BCSL 17	159	61	60
BCSL 20	125	69	80
BCSL 25	113	88	146
BCSRL 32	189	106	274
BCSRL 40	287	140	495
BCSRL 50	396	174	917
BCSRL 60	484	208	1112
BCSRL 75	523	215	1268

BCSK/RK	A	B	W/Kg
BCSK 9	153	35	17
BCSK 11	163	39	20
BCSK 13	182	50	35
BCSK 17	213	61	60
BCSK 20	176	69	80
BCSK 25	240	88	146
BCSRK 32	245	106	274
BCSRK 40	324	140	495
BCSRK 50	420	174	917
BCSRK 60	504	208	1112
BCSRK 75	542	215	1268

10. EU DECLARATION OF CONFORMITY

EU DECLARATION OF CONFORMITY

Manufacturer:
Valmet Flow Control Oy,
Vantaa, Finland
*Valmet Flow Control (Jiaxing) Co., Ltd.,
China
*) Also manufactures certain series

EU Authorised Representative: Valmet Flow Control Oy, Vanha Porvoontie 229, 01380 Vantaa, Finland.
Contact details: +358 10 417 5000

Product: Pneumatic actuator	
Type: B1C- and B1J-series	
ATEX group and category:	Ex II 2 GD
Protection concept of non-electrical equipment	
70°C:	Ex h IIC T6 Gb/ Ex h IIIC T85°C Db
120°C:	Ex h IIC T6…T4 Gb/ Ex h IIIC T85°C…T120°C Db

ATEX 2014/34/EU Annex VIII technical files are archived by Notified Body number 0537.

Manufacturer's certificates:

Standard / Directive	Notified Body and NoBo number	Certificate No.
ISO 9001:2015	LRQA (Certification Body)	00029133 (Approval No.)
ATEX 2014/34/EU Annex IV	DNV Product Assurance AS Norway 2460	Presafe 18 ATEX 91983Q Issue 6

Applicable Directives:

Machinery 2006/42/EC Annex IIB	Actuator
ATEX 2014/34/EU	Non-electrical equipment

As the products within our sole responsibility of design and manufacture may be used as parts or components in machinery and are not alone performing functions as described in Article 6(2) of Machinery Directive 2006/42/EC, we declare that our product(s) to which this Declaration of Conformity relates must not be put into service until the relevant machinery into which it is to be incorporated has been declared in conformity with the provisions of the Machinery Directive.

The product above is manufactured in compliance with the applicable European directives and technical specifications/ standards. The product is in conformity with the customer order.

Non-electrical equipment is according EN 80079-37:2016 and EN 80079-36:2016. The actual surface temperature of non-electrical equipment is depended on the process and ambient conditions (EN 80079-36:2016 § 6.2.5 and 6.2.7). The protection from high or low temperature must be considered by the end user before put into service.

Protection from e.g. static electricity caused by the process or connected equipment must be considered by the user (EN 60079-14 § 6). Follow the caution instruction in identification plate sticker and instruction manual.

The product does not possess any residual risk according to hazard analysis conducted under the applicable directives providing that the procedures stated by the IMO (Installation, Maintenance and Operating) instructions manual are followed and the product is used under conditions mentioned in the technical specifications.

.
Vantaa 1.10.2025

Matti Rousku, Quality Director

11. TYPE CODE

Pneumatic double-acting cylinder actuator, B1C									
1.	2.	3.	4.	5.	6.	7.	8.	9.	10.
B1	C	–	S	Q	U	50/120	H	E	X

1.	Product group
B1	Cylinder actuator with attachment dimensions acc. to ISO 5211

2.	Series
C	Double acting, pneumatic, protection class IP66.

3.	Construction
-	Standard construction without sign
H	Manual hydraulic override (excl. sizes 6 & 9, & if sign 8. is “A”)
M	Centre piece for manual operation (not possible, if 6. sign is U)

4.	Cylinder and housing materials
-	Aluminium cylinder and EN 1561-GJL-200 housing, standard materials, without sign. Except if sign 8. is arctic version “A” then housing and piston always EN 1563-GJS-400-15.
S	Carbon steel cylinder and EN 1561-GJL-200 housing and piston. Except if sign 8. is arctic version “A” then housing and piston always EN 1563-GJS-400-15. (Not available with size 6).
B	Aluminium cylinder and EN 1563-GJS-400-15 housing and piston, (Not available with size 6). When 8. sign is “A”, without sign, standard material.
X	Carbon steel cylinder and EN 1563-GJS-400-15 housing and piston, (Not available with size 6).

5.	Special construction
-	Standard construction without sign
D	Simple service lock-to-close device at housing end. Safety locking during maintenance to **close** position with padlock. (Not available with size 502, 602, 752).
Q	Service lock-up device for housing end. Safe locking during maintenance to **close** position.
W	Service lock-up device for cylinder end. Safe locking during maintenance to **open** position.
QW	Service lock-up device for cylinder and housing end. Safe locking during maintenance to **open and close** position.
Z	Shock absorber on cylinder end (-20 to +120 °C)
N	Shock absorber on housing end (-20 to +120 °C)
P	Actuator equipped with automatic latching device for closed position. Design is made mainly for actuator locking device of capping valve. No free motion.
T	Actuator equipped with manual latching device. Actuator can be locked to **open** position allowing about 20 degrees’ motion.
K	Handwheel on cylinder end (sizes 9 to 25).
L	Handwheel on housing end (sizes 9 to 25).
R	Handwheel both on cylinder end and housing end (sizes 9 to 25).
RK	Handwheel on cylinder end with wormgear (sizes 32 to 75). Not used in 502, 602 and 752.
RL	Handwheel on housing end with wormgear (sizes 32 to 75). Not used in 502, 602 and 752.
RR	Secondary handwheel with wormgear (sizes 32 to 75). Not used in 502, 602 and 752.
Y	Special

6.	INTERFACE FOR ADDITIONAL DEVICES (positioner, limit switch)
U	Interface according to VDI/VDE 3845, standard construction.

7.	Actuator size
	6/15 6/20 6/25 - 9/15 9/20 9/25 9/35 - 11/20 11/25 11/35 11/40 - 13/55 - 17/55 - 20/70 - 25/95 - 32/105 - 40/95 40/105 40/120 - 50/120 50/135 - 502/120 502/135 502/150 502/165 502/180
	E.g. 50/120 = actuator size / shaft bore diameter. Special sizes with oversized cylinder: 50, 60, 75 and double cylinders 502, 602 and 752

8.	Materials of seals and bearings (all versions ATEX II 2 G/D h and ATEX II 3 G/D h)
-	Standard construction without sign (-20° to +70 °C)
HL	For temperatures -20... +120 °C and long-run option L
CL	For temperatures -40... +70 °C, and long-run option L
A	For temperatures -55... +70° C. Arctic service model. Not available if 3. sign is "H" or 11. sign is "M". Size 6 not available.
F	Oversized NPT connections: fast operation
F1	Larger oversized NPT connections: faster operation
L	Long-run option
S	Super long-run option (-20 to +70 ºC)
Y	Special

9.	Screw material
-	Stainless steel (standard) for sizes 6-32. Steel, zinc coated and passivated (standard) for sizes 40 and bigger. Steel, zinc coated and passivated for all sizes with steel cylinder, sign 4 is S or X.
E	Stainless steel for sizes 40 and bigger with aluminium cylinder. Stainless steel for all sizes with steel cylinder, sign 4 is S or X.

10.	Non-standard operation range
-	Standard, X=0, Y=90
X	Valve closed position is limited. **X can be any value between 0-90º.** For example, when closed position is limited to 30 º, **X = 30** (never fully closed).
Z	Valve open position is limited. **Z can be any value between 90-0º.** For example, when open position is limited to 70 º, **Z = 70** (never fully open).
XZ	Valve closed and open position are limited. For example, X = 30 (closed position is limited to 30°) & Z = 70 (open position is limited to 70°)

11.	Special construction
-	No sign = B1 actuator model A
6	Protection class IP66M
7	Protection class IP67/IP67M
/B	B1 actuator model B
G	Oxygen service model, not compatible with “S” option
T	Tropicalization

12. VALMET PRODUCTS: MACHINERY REGULATION 2027

Intended use

The product is designed for flow control applications, including shut-off and/or modulating control duties. The product shall be specified, installed, operated, and maintained only by qualified and competent personnel.

The product is intended for installation in industrial piping systems equipped with a compatible actuator and controller. The product shall be used only with compatible media, including liquids, gases, and steam, or a mixture of the aforementioned, and within the pressure and temperature limits specified for the product.

Reasonably foreseeable misuse

1. Process and Operating Condition Misuse

- Operating the valve above its rated pressure (PS).
- Operating the valve outside its specified temperature limits (TS).
- Using the valve with chemically incompatible media, resulting in corrosion, material degradation, or seal swelling.
- Using the valve with abrasive or particulate-laden media that was not considered during product design.
- Using the valve in oxygen service, other reactive media or hazardous applications without appropriate cleaning, material selection, certification, or classification.
- Subjecting the valve to pressure surges, water hammer, or transient loads beyond the design basis.

2. Functional Misuse

- Using the valve or actuator as a step, platform, or climbing aid.
- Using the valve as a pipeline support or structural load-bearing element.

3. Installation Misuse

- Installing the valve with incorrect flange bolting, gasket selection, or tightening procedures.
- Installing the valve under pipe misalignment, creating excessive mechanical stress.
- Failure to clean or flush the pipeline before installation, resulting in debris-related damage.
- Failure to maintain cleanliness of specially cleaned valves, intended e.g. for oxygen service, during installation.
- Installing the valve in an orientation not intended for the specified application or not considered during product design.
- Combining incompatible valve and actuator configurations.

4. Actuation and Control System Misuse

- Applying actuator torque, thrust, or force beyond specified limits.
- Operating the actuator with incorrect supply pressure, voltage, or control signals.
- Bypassing, disabling, or overriding safety interlocks, features needed for normal operation or protective functions.
- Configuring fail-safe actions incorrectly (e.g., fail-open vs. fail-closed).
- Operating the valve at cycling rates exceeding its design life parameters.
- Using manual override functions while the system remains energized or pressurized without proper safeguards.

5. Maintenance and Service Misuse

- Disassembling or servicing the valve while pressurized or without proper isolation.
- Using non-approved, counterfeit, or unsuitable spare parts.
- Failure to follow specified tightening procedures for packing, fasteners, or bolted connections, including incorrect torque application (over- or under-tightening) and failure to follow the prescribed tightening sequence.
- Failure to perform maintenance inspections and service activities at prescribed intervals.
- Using incompatible lubricants, sealants, or maintenance chemicals.
- Incorrect reassembly resulting in leakage, impaired performance, or equipment malfunction.

6. Human Factors and Operational Misuse

- Applying excessive force or using extension tools (e.g., cheater bars) on handwheels or operating mechanisms.
- Operating the valve without adequate training, authorization, or procedural guidance.
- Unauthorized adjustment of limit switches, travel stops, or control settings.
- Failure to implement Lockout/Tagout/Testout (LOTOTO) procedures prior to maintenance activities.
- Misinterpretation of valve position indication or status feedback.

7. Environmental Misuse

- Operating outside the specified ambient temperature or other conditions range.
- Improper recycling or disposal of the product, its components, or spare parts at the end of their service life.

8. Transport, Storage, and Handling Misuse

- Improper lifting, handling, or transportation, including lifting by the actuator, stem, or other non-designated points.
- Storage without protective covers or suitable environmental protection, resulting in contamination or moisture ingress.

13. GENERAL SAFETY WARNINGS AND DISCLAIMERS

APPENDIX 1:

General safety warning

Lifting

1. Always use a lifting plan created by a qualified person to lift this equipment. Lifting guidance is provided in this IMO (Installation, Maintenance and Operation manual) to assist in lifting plan development. Think about the center of gravity (CG) of the equipment being lifted. Make sure the CG is always under the central lifting point.
2. Actuators may be equipped with lifting threads/lugs on the body or cylinder end caps. These are intended for use with the lifting plan.
3. Use only correct and approved lifting devices. Ensure that lifting devices and straps are securely attached to the equipment prior to lifting.
4. Check, that lifting devices are not damaged and in good condition with a valid check stamp prior to use.
5. Workers must be trained for lifting and handling valves.

Work activities on the actuator

1. Wear your personal safety equipment. Personal safety equipment includes but is not limited to protective shoes, protective clothing, safety glasses, helmet, hearing protection and working gloves.
2. Always follow the local safety instructions in addition to the Valmet instructions. If Valmet instructions conflict with local safety instructions, stop work and contact Valmet for more information.
3. Before beginning service on the equipment make sure that the actuator is disconnected from any kind of power source (pneumatic, hydraulic, and/or electric), and no stored energy is applied on the actuator (compressed spring, compressed air volumes, etc.). Do not attempt to remove a spring return actuator unless the stop screw is carrying the spring force.
4. Always make sure that the pipeline / valve pressure or temperature don't result in any risk when maintenance work is starting or being executed.
5. Keep hands and other body parts out of the flow port when the valve is being serviced and the actuator is connected to the valve. There is a high risk of serious injury to hands and/ or fingers due to malfunction if the valve suddenly starts to operate.
6. When the actuator is being serviced and the actuator is connected to the valve, never touch the inside of the valve. There is a high risk of serious injury to hands and/or fingers if the valve suddenly starts to operate due to malfunction.

General disclaimers

Receive, handle and unpacking.

1. Respect the safety warnings above!
2. Actuators are critical components for pipelines to control valves with high pressure fluids and must therefore be handled with care.
3. Store actuators and equipment in a dry and protected area until the equipment is installed.
4. Do not exceed the maximum storage temperatures given in the IMO (installation, maintenance, and operating instructions).
5. Keep the original packaging on the actuator as long as possible to avoid environmental contamination by dust, water, dirt, etc.
6. Remove the actuator or related accessories pneumatic supply port transportation protective caps just before connecting into plant supply network.

Operating

7. The identification plate (nameplate, or engraved markings) on the actuator gives the information of max. operating and ambient conditions.
8. Temperatures and pressures must never exceed values marked on the actuator identification plate. Exceeding these values may cause damage or personal injury.
9. Never exceed the actuator torque preset values (air supply, position). Application of excessive torque may cause damage to the valve.
10. Valmet actuators typically are designed to be used in atmospheric conditions. Do not use actuators under external pressurized conditions unless specifically designed and explicitly marked for this service.
11. As the use of the actuator is application specific, a number of factors should be taken into account when selecting an actuator for a given application. Therefore, some situations in which the actuators are used are outside the scope of this manual.
12. It is the end user's responsibility to confirm compatibility of the actuator materials with the intended service, however if you have questions concerning the use, application, or compatibility of the actuator for the intended service, contact Valmet for more information.
13. Never use enriched or pure oxygen as actuator supply medium.
14. Actuators intended for use in or with explosive atmospheres must be equipped with a grounding device and marked according ATEX (or equivalent international standards).
15. Extremely fast actuator operating strokes should be avoided especially if repeating cycles. Stroke speed should be limited by restrictor valves in such cases.

Maintenance

16. Respect the safety warnings above!
17. Plan service and maintenance actions, that spare parts, lifting devices and service personnel is available.
18. Maintain the actuator within the recommended minimum maintenance intervals or within the recommended maximum operating cycles.
19. Always make sure that the actuator is depressurized before starting any kind of maintenance work at a actuator.
20. Always check the position of the (valve) actuator before starting maintenance work. Follow the Lock out /tag out (LOTO) rules at the site before starting any maintenance activity.
    - See IMO for the correct actuator yoke/driver arm/lever arm key way position
    - Consider that the positioner may give wrong signals.
21. Sealing and bearing materials (soft parts) should be changed when the actuator is maintained. Always use original equipment manufacturers (OEM) spare parts to ensure proper performance of the repaired actuator.

22. Do not use sharp tools, grinding machines, or files to work on functional surfaces such as sealing or bearing surfaces as this can damage these surfaces.
23. All pressure containing parts must be inspected visually for damage or corrosion. Damaged parts must be replaced.
24. Check the condition of the hard bearings and counter surfaces. Replace parts if there are significant wear, scratches, or damage.
25. Make sure that the actuator and its accessories is positioned in the correct planned orientation into the pipeline.
26. If the actuators are marked to be suitable for explosive atmospheres the correct function of the discharging device must be tested before returning to service.
27. Always work in a clean environment. Avoid getting particles inside the actuator due to machining, grinding, or welding nearby.
28. Never store a maintained actuator without pneumatic supply port protection.
29. Actuator mounting and unmounting:
    - Before installing the actuator on to the valve, be sure the actuator is properly indicating the valve position. Failure to assemble these to indicate correct valve position may result in damage or personal injury.
    - When installing or removing a linkage kit, best practice is to remove the entire linkage assembly, including couplings which may fall off the valve during lifting or when position changes.
    - Mounting sets have been designed to support the weight of the Valmet actuator and recommended accessories. Use of the linkage to support additional equipment or additional weight such as people, ladders, etc. may result in equipment damage or personal injury.

APPENDIX 2:

B1 series lubrication instruction

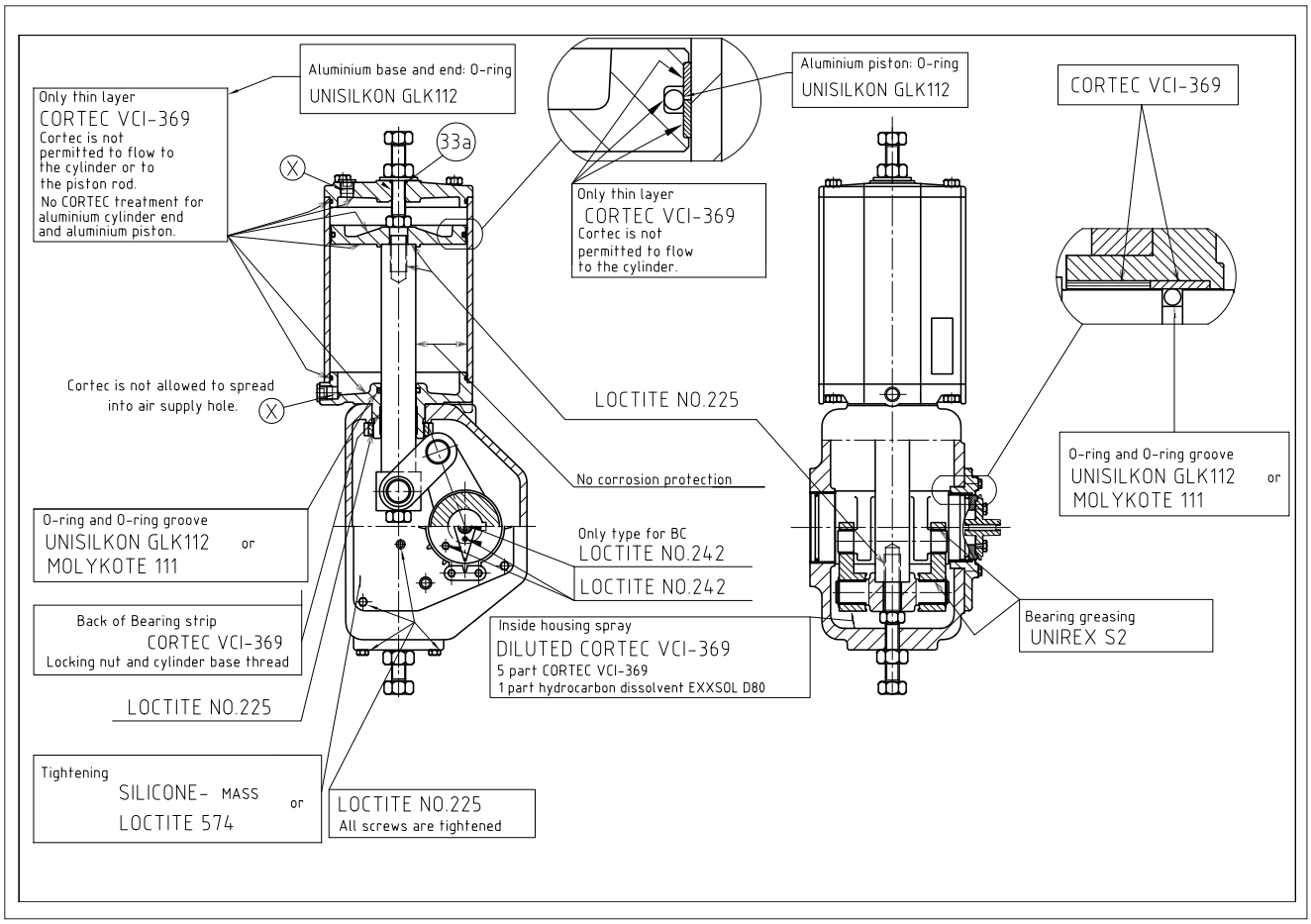

APPENDIX 3:

B1 series super long-run (S option) greasing instruction

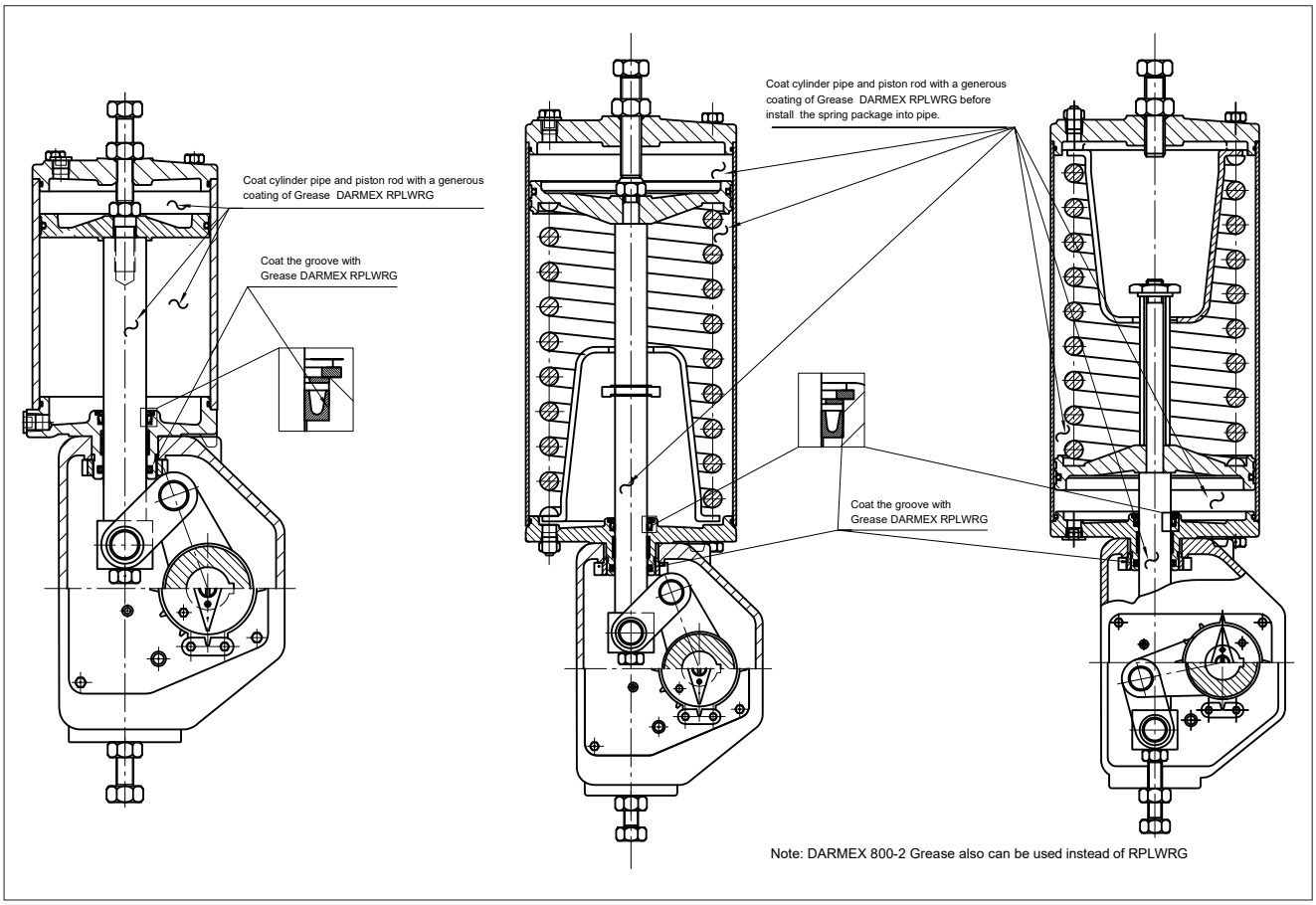

APPENDIX 4:
B1C series piston lifting

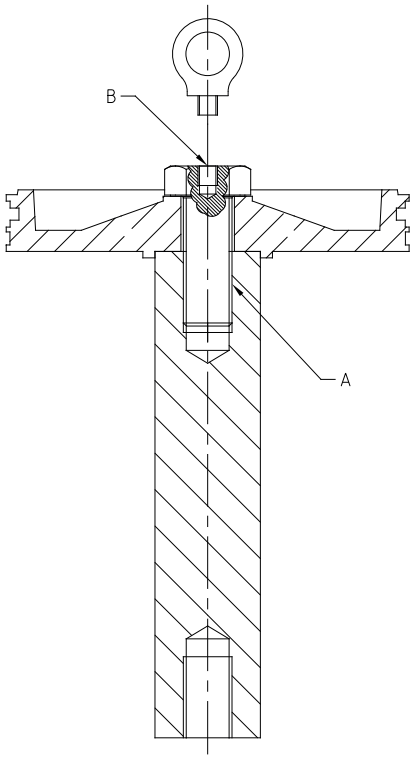

BC Size	Item and Drawing	Weight of piston package	Piston Screw A	Lifting point B
BC6	795320	<10 kg	-	NA
BC9	853820	<10 kg	-	NA
BC11	795360	<10 kg	-	NA
BC13	178560	<10 kg	-	NA
BC17/BC20	178570	10 kg	M24	NA
BC25	178580	18 kg	M30	M12 ↓12 (Φ10.2↓18)
BC32	198150	34 kg	M39	M12 ↓12 (Φ10.2↓18)
BC40	198160	67 kg	M39	M12 ↓12 (Φ10.2↓18)
BC50	199010	127 kg	M45	M12 ↓12 (Φ10.2↓18)
BC60	H153684/F104702	171 kg	M45	M12 ↓12 (Φ10.2↓18)
BC75	H058565/680080	222 kg	M45	M12 ↓12 (Φ10.2↓18)

Note:
If clamping fixture is not available, please follow this instruction for lifting piston (and package) during assembly and disassembly.

1st step: to remove the cylinder end from actuator.
2nd step: to drill the hole in the center of piston screw.(Φ10.2mm wiht 18mm depth)
3rd step: to tap the thread. (M12 with 12mm depth)
4th step: to tighen the lifting jig.
5th step: lift the piston (and package) wtih lifting jig.

Valmet Flow Control Oy
Vanha Porvoontie 229, 01380 Vantaa, Finland.
Tel. +358 10 417 5000.
www.valmet.com/flowcontrol

Subject to change without prior notice.
Neles, Neles Easyflow, Jamesbury, Stonel, Valvcon and Flowrox, and certain other trademarks, are either registered trademarks or trademarks of Valmet Oyj or its subsidiaries in the United States and/or in other countries.

© Valmet, 6BC71EN - 10/2026