Neles™ pneumatic cylinder actuators

Series B1J

Installation, maintenance and operating instructions

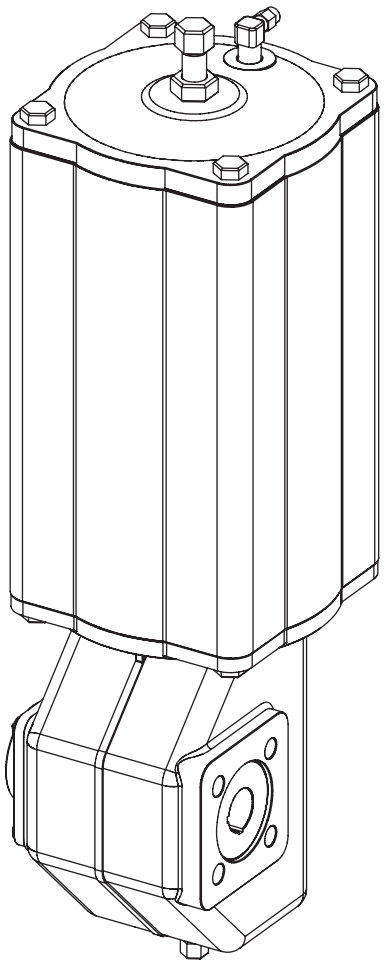

© Valmet, 6BJ71EN - 10/2026

Table of contents

GENERAL 3
Scope of the manual 3
Structure and operation 3
Actuator markings 3
Specifications 3
Recycling and disposal 4
Safety precautions 4

TRANSPORTATION, RECEPTION AND STORAGE 5

MOUNTING AND DEMOUNTING 5
Actuator gas supply 5
Mounting the actuator on the valve 5
Operating directions 6

MAINTENANCE 7
Maintenance general 7
Maintenance of the B1J actuator 7
Maintenance of the B1JA actuator 10
Changing the B1J actuator into a B1JA actuator 12
B1JR and B1JAR actuators 12
B1JRR and B1JARR actuators 14
B1JV and B1JK actuators 15
B1JVA and B1JKA actuators 15
B1J 322 and B1JA 322 actuators 16
B1J_H_ actuators 16

MALFUNCTIONS 16

TOOLS 16

ORDERING SPARE PARTS 17

EXPLODED VIEWS AND PARTS LISTS 18
Actuators B1J 6-20 18
Actuators B1J 25-40 19
Actuator B1JU322 20
Actuators B1JA 6-20 21
Actuator B1JA 25-40 22
Actuator B1JAU 322 23

DIMENSIONS AND WEIGHTS 24
Actuators B1J, B1JA 24
Actuator B1JR / B1JRR 24
Actuator B1JAR / B1JARR 25
Attachment dimensions 25
Center of gravity 26

EU DECLARATION OF CONFORMITY 28

TYPE CODE 29

VALMET PRODUCTS: MACHINERY REGULATION 2027 30

GENERAL SAFETY WARNINGS AND DISCLAIMERS 31
General safety warning 31
General disclaimers 31

READ THESE INSTRUCTIONS FIRST!

These instructions provide information about safe handling and operation of the valve.

If you require additional assistance, please contact the manufacturer or manufacturer's representative.

SAVE THESE INSTRUCTIONS!

Addresses and phone numbers are printed on the back cover.

1. GENERAL

1.1 Scope of the manual

These instructions provide essential information for the use of Neles B1J series actuators. For more details about valves, positioners and accessories, refer to the separate installation, operating and maintenance instructions of the particular unit.

1.2 Structure and operation

Neles™ B1J series actuators are pneumatic cylinder actuators designed for control and shut-off service. The linkage bearings have material options. The robust cast-iron housing efficiently protects the mechanism from ambient dust and moisture.

The spring provides the required safety function; the valve either opens or closes if the air supply is interrupted.

The mounting face dimensions of the B1J actuator comply with the ISO 5211 standard.

In the B1J type, the spring is located on the piston rod side. The secondary shaft of the actuator, operated by the spring, rotates clockwise as seen from the pointer cover side. The piston then moves towards the end of the cylinder. The B1J type is normally applied for the spring-to-close operation, as it normally closes in the clockwise direction. The two keyways in the secondary shaft are positioned at an angle of 90° to each other, making it possible to change the position of the actuator in relation to the valve, see Fig. 1.

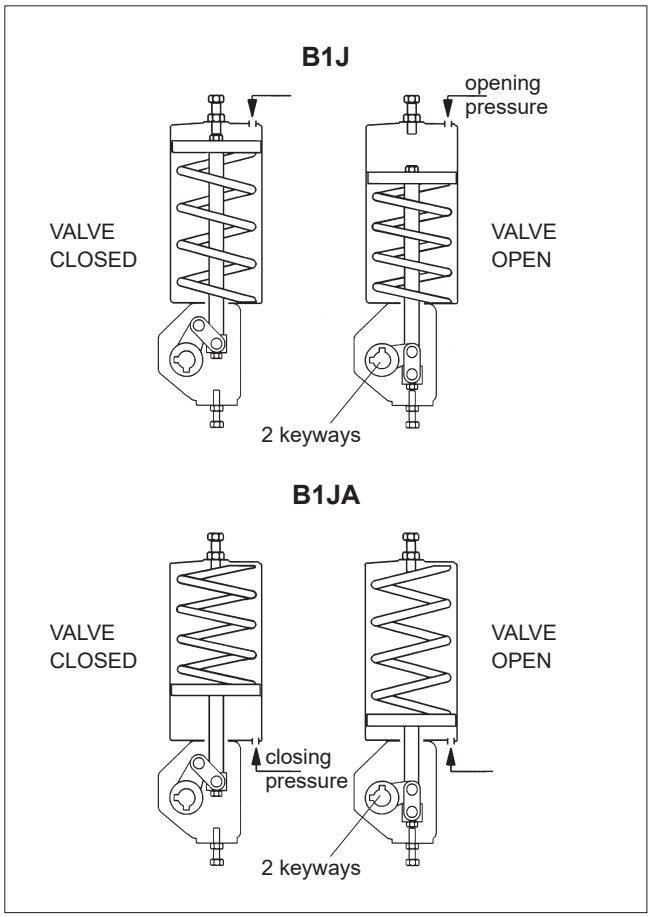

Fig. 1 Operating principle of the actuator

In the B1JA type, the spring is located in the cylinder end side. The secondary shaft, operated by the spring, rotates counter-clockwise as seen from the pointer cover side. The piston moves away from the cylinder end. The B1JA type is used for the spring-to open function, see Fig. 1.

The size of the spring actuator is selected according to the torque given by the spring. It is, however, important to check that there is sufficient supply pressure to give the required torque in the opposite direction.

Screws are located in the upper end of the cylinder and in the lower end of the housing to regulate the length of the piston stroke and also the rotation angle of the actuator shaft.

1.3 Actuator markings

The actuator is provided with an identification plate, see Fig. 2. Identification plate markings are:

1. Type
2. Manufacturing site, date, successive no. (bar code)
3. SO number or ID number (bar code)
4. Checked by
5. Max. supply pressure
6. ATEX category and protection level

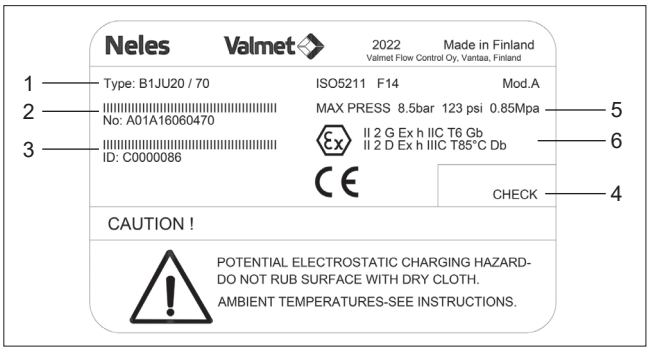

Fig. 2 ID plate.

1.4 Specifications

Protection class:	IP66, NEMA 4X
Ambient temperatures:	
Standard desig	-20° to 70 °C / -4° to 160 °F
Low temperature design	-40° to 70 °C / -40° to 160 °F
High temperature design	-20° to +120 °C / -4° to 250 °F
Arctic temperature design	-55° to +70 °C,/ -67° to 158 °F
Maximum supply pressure:	8.5 bar / 120 psi
Stroke volume, liters / in^3:	
B1J/B1JA 6	0.47 / 28.7
B1J/B1JA 8	0.9 / 55
B1J/B1JA 10	1.8 / 111
B1J/B1JA 12	3.6 / 225
B1J/B1JA 16	6.7 / 415
B1J/B1JA 20	13 / 795
B1J/B1JA 25	27 / 1642
B1J/B1JA 32	53 / 3231
B1J/B1JA 40	96.7 / 5901
B1J/B1JA 322	106 / 6480

Nominal torque at spring force, Nm / lbf ft:

B1J/B1JA 6	35 / 26
B1J/B1JA 8	70 / 50
B1J/B1JA 10	150 / 110
B1J/B1JA 12	300 / 220
B1J/B1JA 16	600 / 440
B1J/B1JA 20	1200 / 880
B1J/B1JA 25	2400 / 1760
B1J/B1JA 32	4800 / 3500
B1J/ B1JA 40	8400 / 6199
B1J/B1JA 322	9600 / 7000

NB. The torque changes according to supply pressure.

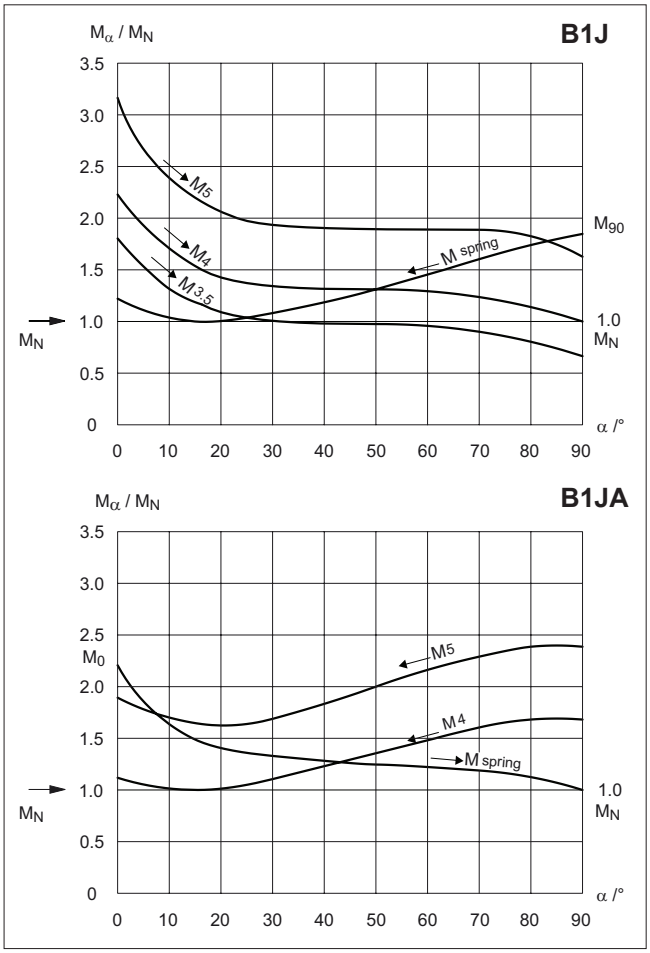

Fig. 3 Output torque as a function of turning angle

1.5 Recycling and disposal

Most actuator parts can be recycled if sorted according to material. Most parts have material marking. A material list is supplied with the actuator. In addition, separate recycling and disposal instructions are available from the manufacturer. An actuator can also be returned to the manufacturer for recycling and disposal against a fee.

1.6 Safety precautions

User Safety

CAUTION:
Don’t exceed the permitted values!
Exceeding the permitted pressure value marked on the actuator may cause damage and lead to uncontrolled pressure release in the worst case. Damage to the equipment and personal injury may result.

CAUTION:
Don’t dismantle a pressurized actuator!
Dismantling a pressurized actuator leads to uncontrolled pressure release. Shut off the supply pressure and release pressure from the cylinder before dismantling the actuator.
Otherwise, personal injury and damage to equipment may result.

CAUTION:
Don’t dismantle the spring package!
The spring package within the cylinder is preloaded. The lock-welded fastening screw of the piston must never be opened or the spring package dismantled. The piston, piston rod, spring and spring plate of the B1J actuator are always delivered as a pre-assembled package.

CAUTION:
Don’t use the lever in the torsion arm for manual operation when the actuator is pressurized!
Shut off the supply pressure and release pressure from the cylinder before using the hand lever. Note also the dynamic torque caused by the pipe flow.
Otherwise, personal injury and damage to equipment may result.

CAUTION:
Don’t supply air to the spring side!
It is not permitted to supply air to the spring side of B1J / B1JA actuator. Actuator is not designed for this. Do not try to modify single acting actuator into double acting version. Damage to the equipment and personal injury may result.

CAUTION:
Take the weight of the actuator or valve combination into account when handling it!
Do not lift the valve combination from the actuator, positioner, limit switch or their piping. Lift the actuator as directed in Section 2, lifting ropes for a valve combination should be fastened around it. The weights are shown in Section 9. Dropping may result in personal injury or damage to the equipment.

ATEX/Ex Safety

CAUTION:
Potential electrostatic charging hazard, do not rub surface with dry cloth.

CAUTION:
Ensure the general process and worker protection from static electricity in the facilities

NOTIFICATION:
The actual surface temperature of actuator is depended on the process and ambient conditions. The protection from high or low temperature must be considered by the end user before put into service.

2. TRANSPORTATION, RECEPTION AND STORAGE

Make sure that the actuator and associated equipment have not been damaged during transportation. Store the actuator carefully before installation, preferably indoors in a dry place. Do not take it to the installation site or remove the protective caps of ports for piping until just before installation.

Lift the actuator as shown in Fig. 4: in a horizontal position from the stop screws. Horizontal lifting must be done by using two secure lifting slings, it is not permitted to lift the actuator with only one long lifting sling. In a vertical position from an eye bolt screwed in the place of a stop screw or from limit stop bolt with lifting tool (table 1). Do not use the eye bolt or lifting tool for lifting dual-cylinder actuators. Larger actuators have lifting hooks. Do not lift the valve-actuator assembly from actuator. Refer to Section 9 for weights. See section 9.5. for actuator center of gravity for planning the lifting safely.

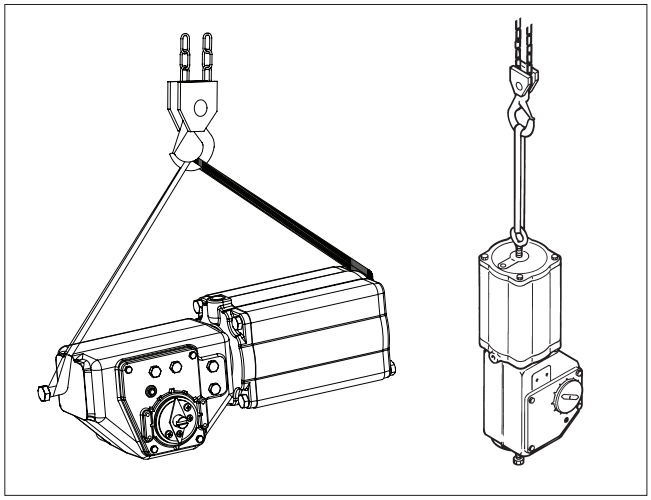

Fig. 4 Lifting the actuator

CAUTION
Do not lift the valve-actuator assembly from actuator.

Table 1

Lifting tool	
Actuator size, Old model with imperial bolts	**Tool ID.**
BC 12-16 (BC 11) / BJ 8-10, UNC 5/8	H128479
BC 20 (BC 17) / BJ 12, UNC 3/4	H128480
BC 25 / BJ 16, UNC 1	H128481
BC 32 / BJ 20, UNC 1 1/4	H128482
BC 40 / BJ 25, UNC 1 1/2	H128483
BC 50 / BJ 32, UNC 1 3/3	H128484
Actuator size, Current model with metric bolts	**Tool ID.**
BC 6-13 / BJ 8-10 / M12 & M16	H096901
BC 17-25 / BJ 12-16 / M20 & M24	H096902
BC 32-50 / BJ 20-40 / M30 & M42	H096903

3. MOUNTING AND DEMOUNTING

3.1 Actuator gas supply

Dry compressed air or natural gas (sweet) or nitrogen can be used in actuators in open-close operation, no oil spray is needed or recommended. Clean, dry and oil-free instrument air must be used for cylinder actuators with a positioner.

See table below for recommended air quality values according to ISO 8573-1 for B1 actuator. Please note that instrumentation might have stricter requirements than actuator.

The air supply connections are presented in the dimensional drawings in Section 9. The maximum supply pressure is 8.5 bar.

Recommended air quality	ISO 8573-1, class 3
Solid particle max size	40µm (ISO 8573-1, class 5)
Humidity	ISO 8573-1, class 1 (-20°C / dew point 10° below ambient temperature)
Oil class	3 (or < 1 ppm)

3.2 Mounting the actuator on the valve

CAUTION:
Take the weight of the actuator or valve combination into account when handling it!

CAUTION:
When detaching actuator from valve, sudden release may take place due to friction on valve shaft - actuator bore connection.

CAUTION:
Beware of the cutting movement of the valve!

Install the actuator so that the shaft of the valve or any other device to be actuated goes into the shaft bore of the actuator. If the bore is larger than the shaft diameter, use a keyed shaft adapter sleeve or bushing. There are two keyway slots in the shaft bore of the actuator at an angle of 90°. These allow the installation position of the actuator to be changed in relation to the valve. Neles valves have a bevel at the end of their shafts to facilitate installation.

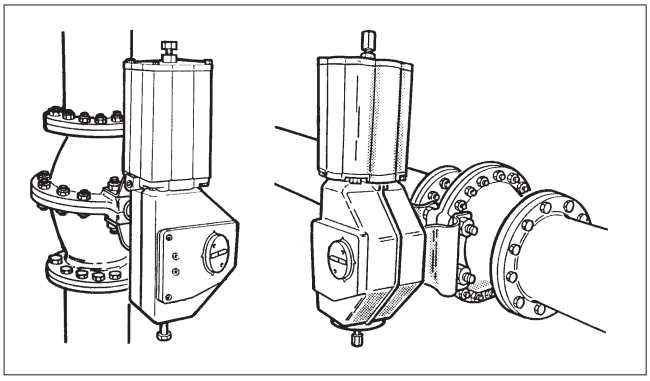

Fig. 5 Ways to install the actuator

The installation position can be selected freely, but Valmet recommends installation with the cylinder upright. The actuator is thus best protected against damage due to supply air impurities or water.

When the installation position of the actuator is altered, the arrow indicating the operating direction must be turned to correspond with the actual operation of the valve.

When necessary, lubricate the shaft bore and bushing with Cortec VCI 369 or an equivalent anti-corrosive agent to prevent it from jamming due to rust.

The actuator must not be allowed to come in contact with the pipework, because the vibrations may damage it or cause unsatisfactory operation.

In some cases, e.g. when using large actuators or with extensive pipework vibrations, the actuator should be supported. Consult Valmet business for instructions.

If the actuator is used with devices other than Neles valves, any additional parts attached to the actuator must be properly protected.

3.3 Operating directions

A sticker on the actuator cylinder indicates the spring action direction.

NOTE:
Separate instructions are available for adjusting the close limit of metal-seated butterly valves. Refer to the installation, operating and maintenance instructions of the valve.

B1J actuator - spring-to-close direction

Install the actuator on the valve with the piston in the upper end of the cylinder and the valve in the closed position, see Fig. 6. The cylinder must be depressurized and the air ports open. Adjust the closed-position setting using the stop screw (26) at the end of the cylinder. Stop screw (26) is sealed with o-ring (33a). The open-position setting is adjusted with the stop screw (27) at the bottom of the housing while the actuator is pressurized and the piston is in the lower position.

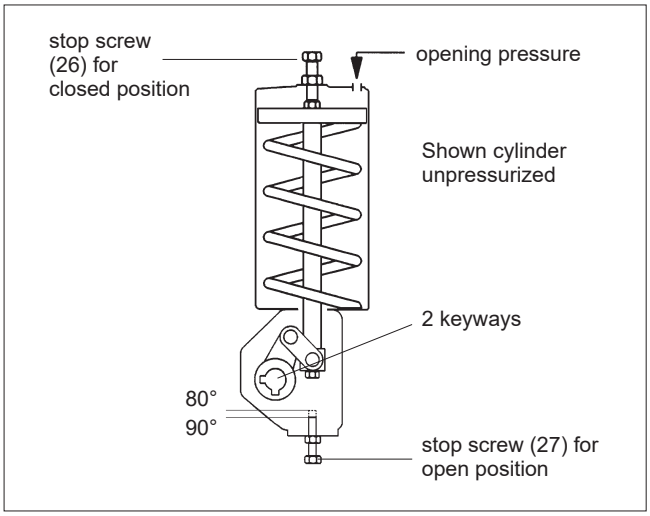

Fig. 6 B1J actuator

B1JA actuator - spring-to-open direction

Install the actuator on the valve with the piston in the lower end of the cylinder and the valve in the open position, see Fig. 7. The cylinder must be unpressurized and the air ports open. Adjust the open-position setting using the stop screw (27) at the bottom of the housing. The close-position setting is adjusted with the stop screw (26) at the end of the cylinder while the actuator is pressurized and the piston is in the upper position.

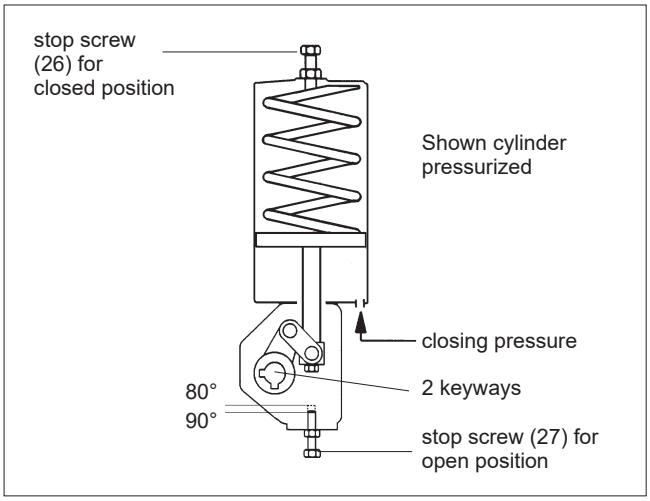

Fig. 7 B1JA actuator

Demounting the actuator from the valve

CAUTION:
Take the weight of the actuator or valve combination into account when handling it!

CAUTION:
Beware of the cutting movement of the valve!

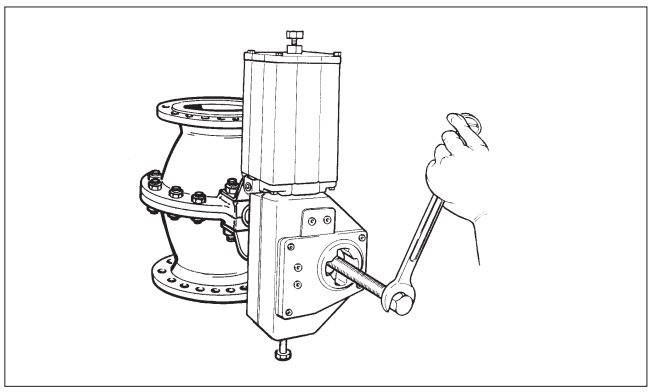

Fig. 8 Removing the actuator with the extractor

The actuator must be depressurized and the supply air pipes disconnected. Unscrew the actuator-side screws of the bracket and pull the actuator off the valve shaft. This is best done using a specific extractor, see Fig. 8 and Section 6. Note the mutual positioning of the valve and the actuator to ensure correct functioning after reassembly.

4. MAINTENANCE

4.1 Maintenance general

CAUTION:
Observe the safety precautions mentioned in Section 1.6 before maintenance!

Although Neles actuators are designed to work under severe conditions, proper preventative maintenance can significantly help to prevent unplanned downtime and in real terms reduce the total cost of ownership. Valmet recommends inspecting the actuators at least every five (5) years.

The inspection and maintenance interval depends on the actual application and process condition. The inspection and maintenance intervals can be specified together with your local Valmet experts.

During this periodic inspection the parts detailed in the Spare Part Set should be replaced. Time in storage should be included in the inspection interval.

Maintenance can be performed as presented below. If maintenance assistance is required, please contact your local Valmet office. The part numbers in the text refer to the exploded view and to the parts list in Section 8, unless otherwise stated.

Under severely corrosive conditions, the linkage system inside the housing should be lubricated at six month intervals. Use Cortec VCI 369 anti-corrosive agent or the equivalent. The housing may also be half filled with semi-fluid water-repellant grease (e.g. Mobilux EP2) while the piston rod is in the lower position.

See appendix 2 for B1 series general lubrication instruction.
See appendix 3 for B1 super long-run option special lubrication instructions.

If you remove the stop screw, adjust the limits after lubrication or grease filling!

NOTE:
Repair and maintain actuator in a safe environment.

NOTE:
In order to ensure safe and effective operation, always use original spare parts to make sure that the actuator functions as intended.

NOTE:
In order to ensure safe and intended performance, remember to re-assemble all parts (e.g. 3a, 4a) as per original construction.

NOTE:
When sending goods to the manufacturer for repair, do not disassemble them.

NOTE:
For safety reasons, replace bolting if the threads are damaged, have been heated, stretched or corroded.

NOTE:
Before using chemicals, read Material Safety Data Sheet.

4.2 Maintenance of the B1J actuator

CAUTION:
Don’t dismantle a pressurized actuator!

CAUTION:
To release spring tension, the stop screw at the end of the cylinder must be removed before the cylinder fastening screws are opened!

CAUTION:
Don’t dismantle the spring package!
The spring package within the cylinder is preloaded. Never open the lock-welded fastening screw of the piston or dismantle the spring package. The piston, piston rod, spring and spring plate of the B1J actuator are always delivered as a pre-assembled package.

The cylinder has a warning plate (43). When servicing the unit, check that the plate is in place and legible. See Fig. 9. Also check that the cylinder has the arrow sticker indicating the spring operating direction.

Fig. 9 Warning plate of the B1J actuator

Replacement of piston seals

We recommend that all seals and soft bearings be replaced when the actuator has been dismantled for servicing.

- Detach the actuator.
- Check that the cylinder has been depressurized, and the piston is at the outermost end of the cylinder.
- Remove the cylinder end side stop screw (26).
- Remove cylinder end (44).
- Remove housing cover (2).
- Unscrew the bearing screw (29) and the cylinder fastening screws (31) from the cylinder base (6) side, see Fig. 10. If the piston turns, do not prevent the turning with the piston fastening nut; send the entire actuator to the manufacturer to be repaired. **It is very dangerous if the lock welding of the piston fastening nut is broken!**
- Remove the cylinder with the piston - do not dismantle the spring package!
- Remove the O-rings.
- Slide the piston out of the cylinder.
- For large size actuators, see appendix 1 & 4 for safely lifting the piston out of the cylinder.
- Remove old seals and O-rings (24, 18).
- Remove piston rod seal (16, 16a) and bearing (22). Clean the seal space.

NOTE:
For large size actuators lifting tools are required during maintenance due to weight of components. Always plan how to lift safely. See appendix 1 for lifting safety.

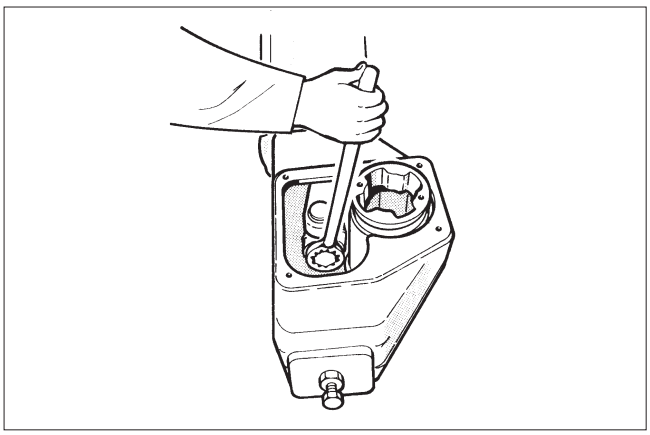

Fig. 10 Opening the fastening screw of the actuator bearing unit

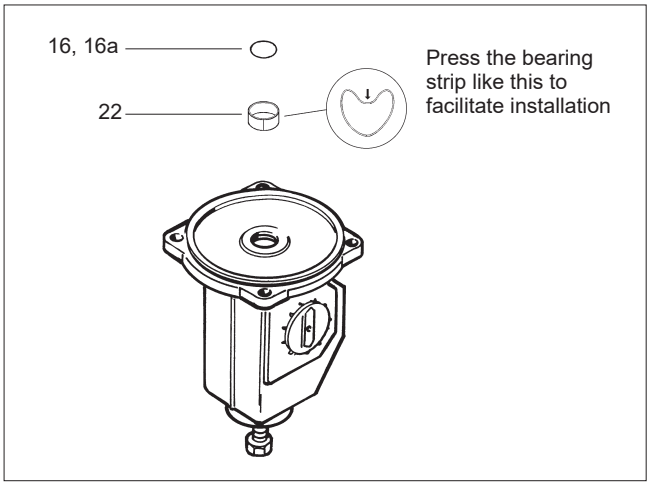

Fig. 11 Mounting the piston rod bearing and seal

- Lubricate seal space and new O-rings (16, 16a) with Unisilikon L250L or equal silicone grease. Lubricate seal space with Cortec VCI-369. Install new bearing (22) and O-rings (16, 16a), see Fig. 11.
- Clean piston seal groove and apply a thin coat of Cortec VCI 369.
- Install the O-ring (18) located under the piston seals.
- Place piston seals (24) around the piston so that the ends of the strips are located at opposite sides. Tighten the strips with a tie ring as in Fig. 12. Strips indicated with an asterisk can be cut 1.5 to 3 mm shorter to facilitate assembly.

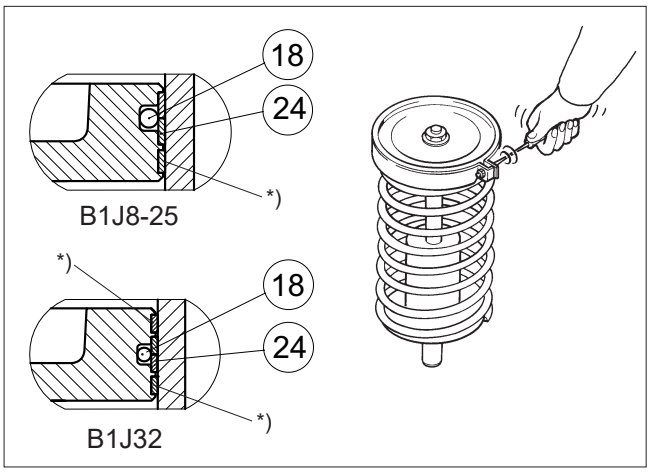

Fig. 12 Tightening piston seals with a tie ring

NOTE:
The inside surface of the cylinder must be free of any grease!

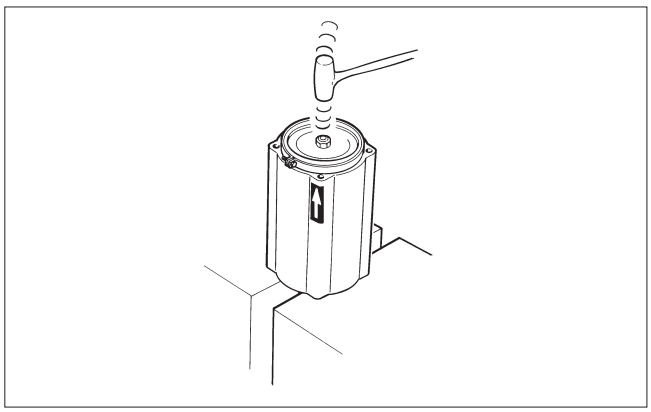

Fig. 13 Placing the piston in the cylinder

- Hammer or press the piston into the cylinder through the tie ring. Note the indicator arrow direction. See Fig. 13.
- For large size actuators, see appendix 1 & 4 for safely lifting the piston back into the cylinder.
- Install new O-rings (19). Replace cylinder end and install cylinder with piston. Note the location of the air supply port: it must correspond to the exhaust air port in the cylinder base.
- Tighten screws (31) in actuator sizes B1J20 and smaller, or tighten nuts (45) in sizes B1J25 and larger; the torques for both are given in Table 2.

Table 2 Tightening torques for screws and nuts

Torque, Nm						
Item	**29**	**30**	**31 / 45**	**33**	**34**	**35**
Actuator						
B1J 6	35	8	12	30	30	150
B1J 8	35	8	18	70	30	150
B1J 10	90	8	40	70	70	180
B1J 12	170	12	80	130	70	200
B1J 16	300	12	80	220	70	250
B1J 20	700	20	80	400	130	400
B1J 25	1100	30	200	1000	220	800
B1J 32	2000	70	250	1000	400	1500
B1J 40	2000	70	310	1000	1000	2000

- Apply bearing unit screw (29) thread with a sealant, e.g. Loctite 225, and tighten the screw as in Table 2.
- Fasten the housing cover temporarily so that the secondary shaft bearings function but the linkage can still be seen, see Fig. 14. Note the grounding rings (3A, 4A).

CAUTION:
Keep your fingers, tools or other items out of the housing while operating the actuator with the cover open!

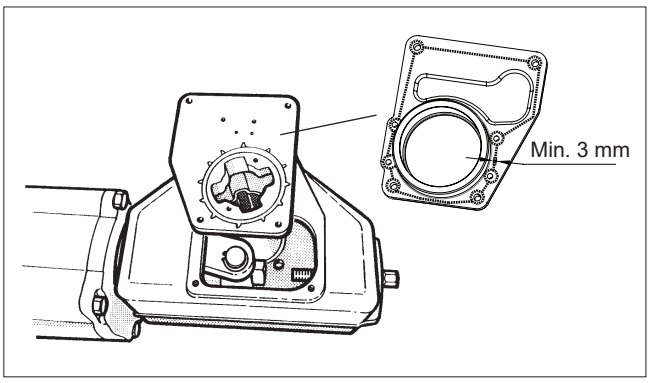

Fig. 14 Mounting the cover on the housing

- Check the attachment of the end and the base before temporarily connecting the compressed air supply to the actuator with a shut-off valve.
- Operate the actuator to check cylinder function and the condition of linkage bearings. Close the air supply and depressurize the cylinder.
- Lubricate the linkage, inside surface of housing and cover throughout with Cortec VCI 369 anti-corrosive agent.
- Clean housing and cover contact area. Apply proper amount (min. 3 mm diameter continuous path, as shown in Fig. 14) of sealant, e.g. silicone mass, to the interface between housing and cover, and fasten the cover.
- Install the actuator on the valve and adjust the stop screws.

To remove the cylinder base, you will need a special tool for opening the lock nut, see Section 6.

Replacement of linkage bearings and X-rings

- Detach actuator from valve.
- Check that the cylinder has been depressurized, and the piston is at the outermost end.
- Remove cylinder end side stop screw (26).
- Remove housing cover (2).
- Open bearing unit (5) fastening screw (29). See Fig. 10.
- Turn lever arm (3) to detach the bearing unit from the piston rod (10). Lift the entire linkage out of the housing. See Fig. 15.
- Remove lock rings (36) and support rings (37). See Fig. 16.
- Remove connection arms (4), ring (4A) and check the condition of the bearings (20, 21).

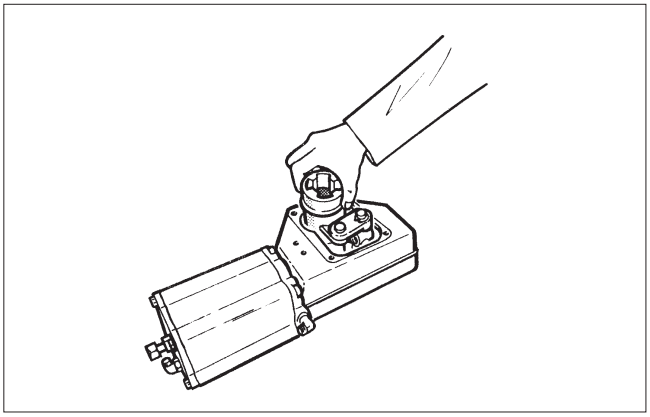

Fig. 15 Removing the linkage from the housing

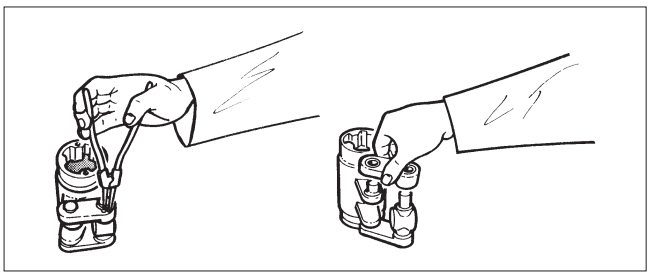

Fig. 16 Dismantling the linkage

The connection arm (4) bearings (20, 21) of the actuator are fastened with a press-on fit, and therefore the entire connection arm must be replaced instead of changing the bearings.

- Remove lever arm bearings (23), X-rings (17) and the grounding ring (3A).
- Clean the linkage parts and apply Cortec VCI 369 to bearing and seal surfaces.
- Install the grounding ring (3A).
- Install the lever bearings (23). The bearing strip (23) has a chamfer on one side, which is meant to be facing upwards towards the housing cover, so that the chamfered side is in contact with the X-ring (17).
- Install the X-rings (17). The X-rings must not be twisted at any point. Make sure they are placed evenly and uniformly around the whole lever arm surface. On the housing cover side the X-ring (17) will fit only if installed together with a chamfered bearing strip (23).
- Assemble the linkage and install in the housing. See Figure 16 for the correct position. Note that there are 2 pieces of grounding ring (4A) needed under the connection arm. All grounding rings (3A and 4A) are needed to meet the ATEX requirements.
- Apply sealant, e.g. Loctite 2400, 242, or 225, to the bearing unit screw (29) thread and tighten the screw as in Table 2.
- Lubricate the linkage, inside surface of housing and cover throughout with Cortec VCI 369 anti-corrosive agent.
- Install new pressure outlet valve (58) on to housing cover.
- Clean housing and cover contact area. Apply proper amount (min. 3 mm diameter continuous path) of sealant, e.g. silicone mass, to the interface between housing and cover, and fasten the cover.
- Operate the actuator to check that it is moving properly.
- Install the actuator on the valve and adjust the stop screws.

In a corrosive environment with high ambient humidity the linkage must be lubricated with Cortec VCI 369 every six months or the housing filled with grease. See Section 4.1.

4.3 Maintenance of the B1JA actuator

CAUTION:
Don't dismantle a pressurized actuator!

CAUTION:
To release spring tension, always remove the stop screw at the bottom of the housing before opening the cylinder fastening screws!

CAUTION:
Don't dismantle the spring package!
The spring pack within the cylinder is preloaded. Never open the lock-welded fastening screw or the piston or dismantle the spring package. The piston, piston rod, spring and spring plate of the B1JA actuator are always delivered as a pre-assembled package.

The cylinder has a warning plate (43), see Fig. 17. When servicing the unit, check that the plate is in place and legible. Also check that the cylinder has the arrow sticker indicating the spring operating direction.

Fig. 17 B1JA actuator warning plate

Replacement of piston seals

CAUTION:
Keep your fingers, tools or other items out of the housing while operating the actuator with the cover open!

We recommended that all seals and soft bearings be replaced when the actuator has been dismantled for servicing.

- Detach the actuator from the valve.
- Check that the cylinder has been depressurized, and the piston is at the cylinder base end.
- Remove the cylinder base side stop screw (27).
- Remove cylinder fastening screws (31) from the cylinder base (6) side. Lift the cylinder off together with the end.
- Remove housing cover (2).
- Turn the linkage enough (by supplying sufficient pressure in to cylinder) to expose the bearing unit fastening screw (29).
- Remove the piston with the spring package - **do not dismantle the spring package!**
- For large size actuators, see appendix 1 & 4 for safely lifting the piston out of the cylinder.
- Remove old seals and the O-ring (24, 18).
- Remove piston rod seal (16, 16a) and bearing (22). Clean the seal space.
- Lubricate seal space and new O-rings (16, 16a) with Unisilikon L250L or Molykote III. Lubricate seal space with Cortec VCI-369. Install new bearing (22) and O-rings (16, 16a), see Fig. 11.
- Clean the piston seal groove and lubricate with a thin layer of Cortec VCI 369.
- Install the O-ring (18) located under the piston seals.
- Place piston seals (24) around the piston so that the ends of the strips are at opposite sides. Tighten the strips with a tie ring as in Fig. 18. Strips indicated with an asterisk can be cut 1.5 to 3 mm shorter to facilitate assembly.

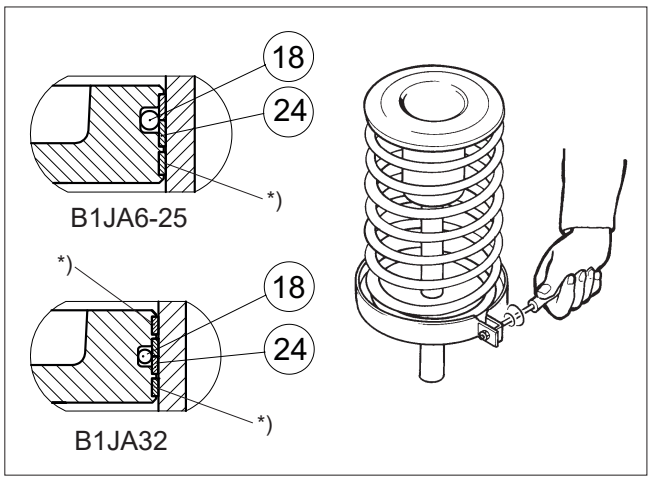

Fig. 18 Tightening piston seals with the tie ring

NOTE:
The inside surface of the cylinder must be free of any grease!

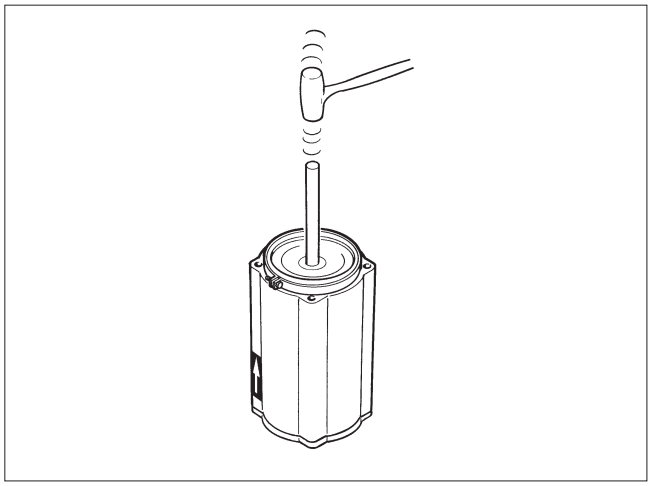

Fig. 19 Placing the piston in the cylinder

- Hammer or press the piston into the cylinder through the tie ring. Note the indicator arrow direction. See Fig. 19.
- For large size actuators, see appendix 1 & 4 for safely lifting the piston back into of the cylinder.
- Install new cylinder base O-rings (19). Replace cylinder with piston.
- Apply sealant, e.g. Loctite 225, to the bearing unit screw (29) thread and tighten the screw as in Table 2 before mounting onto cylinder base.
- Fasten the housing cover temporarily so that the secondary shaft bearings function but the linkage can be seen.

CAUTION:
Keep your fingers, tools or other items out of the housing while operating the actuator with the cover open!

- Check the attachment of the end and the base before temporarily connecting the compressed air supply to the actuator with a shut-off valve.
- Operate the actuator to check cylinder function and the condition of bearings. Close the air supply and depressurize the cylinder.
- Lubricate the linkage, inside surface of housing and cover throughout with Cortec VCI 369 anti-corrosive agent.
- Clean housing and cover contact area. Apply proper amount (min. 3 mm diameter continuous path, as shown in Fig. 14) of sealant, e.g. silicone mass, to the interface between housing and cover, and fasten the cover. See Table 2 for torque.
- Install new pressure outlet valve (58) on to housing cover.
- To remove the cylinder base, you will need a special tool for opening the lock nut, see Section 6. When reinstalling, secure the nut with Loctite 225 or equal liquid glue.
- Install the actuator on the valve and adjust the stop screws.

Replacement of linkage bearings and X-rings

CAUTION:
For reasons of safety, follow the work procedure given below exactly.

- Detach actuator from valve.
- Check that the cylinder has been depressurized, and the piston is at the cylinder base end.
- Remove housing end stop screw (27).
- Remove housing cover (2).
- Open cylinder fastening screws (31) from the base side.
- Lift cylinder and piston until the bearing unit fastening screw (29) can be opened.
- Open fastening screw. See Fig. 10.
- Turn lever arm (3) to detach the bearing unit (5) from the piston rod. Lift the entire linkage out of the housing. See Fig. 15.
- Remove lock rings (36) and support rings (37). See Fig. 16.
- Remove connection arms (4), ring (4A) and check the condition of the bearings (20, 21).

The connection arm (4) bearings (20, 21) of the actuator are fastened with a press-on fit, and so the entire connection arm must be replaced instead of changing the bearings.

- Remove lever arm bearings (23) and X-rings (17) and the grounding ring (3A).
- Clean linkage parts and apply Cortec VCI 369 to bearing and seal surfaces.
- Install the grounding ring (3A).
- Install the lever bearings (23). The bearing strip (23) has a chamfer on one side, which is meant to be facing upwards towards the housing cover, so that the chamfered side is in contact with the X-ring (17).
- Install the X-rings (17). The X-rings must not be twisted at any point. Make sure they are placed evenly and uniformly around the whole lever arm surface. On the housing cover side the X-ring (17) will fit only if installed together with a chamfered bearing strip (23).
- Assemble the linkage and install in the housing. See Figure 16 for the correct position. Note that there are 2 pieces of grounding ring (4A) needed under the connection arm. All grounding rings (3A and 4A) are needed to meet the ATEX requirements.
- Apply sealant, e.g. Loctite 2400, 242 or 225, to bearing unit screw (29) thread and tighten the screw as in Table 2.
- Install new cylinder base O-ring (19). Install the cylinder.
- Lubricate the linkage, inside surface of housing and cover throughout with Cortec VCI 369 anti-corrosive agent.
- Install new pressure outlet valve (58) on to housing cover.

- Clean housing and cover contact area. Apply proper amount (min. 3 mm diameter continuous path, as shown in Fig. 14) of sealant, e.g. silicone mass, to the interface between housing and cover, and fasten the cover.
- Operate the actuator to check that it is moving properly.
- Install the actuator on the valve and adjust the stop screws.

In a corrosive environment with high ambient humidity the linkage must be lubricated with Cortec VCI 369 about every six months, or the housing filled with grease. See Section 4.1.

4.4 Changing the B1J actuator into a B1JA actuator

The B1J actuator can be changed into a B1JA actuator (or vice versa) by replacing the spring package and turning the cylinder the other way around.

Removing the cylinder

Remove the cylinder as in Section 4.2.

Changing the spring package

Replace the spring package of the B1J actuator with a B1JA spring package ordered from the manufacturer. The cylinder must be turned 180°. See Fig. 20.

NOTE:
The warning plate of the cylinder must also be changed to correspond with the B1JA actuator!

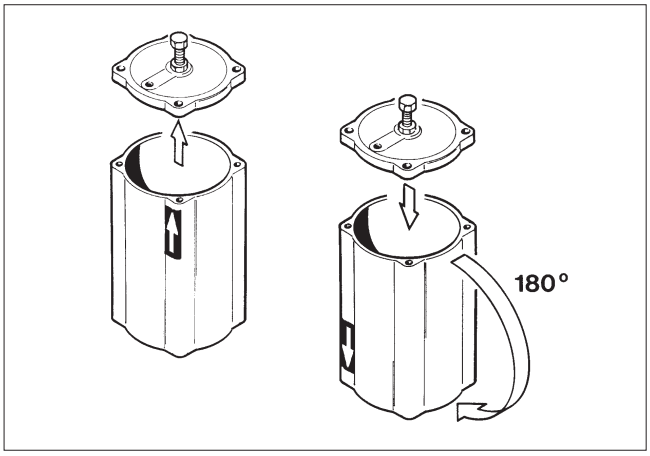

Fig. 20 Turning the cylinder

Assembling the actuator

Assemble the actuator as in Section 4.2.

NOTE:
It is not permitted to try to modify the B1J (single acting) actuator into a B1C / double acting version. It is not safe as the design is different.

4.5 B1JR and B1JAR actuators

B1JR actuator

The B1JR actuator is otherwise like the B1J except that it can be operated manually to bring the piston to the lower position against the spring in case there is no air supply. The B1J actuator can be changed into a B1JR by replacing the cylinder end (44) accordingly and adding parts (50 to 56), see Fig. 22

NOTE:
There is some air bleed trough the spindle thread when the spindle (50) with the O-ring (54) is positioned inside the cylinder. I.e. when the valve has been manually operated to open position during compressed air loss and then the air pressure is restored. To stop the leakage operate the manual override to closed position. See Fig. 22

B1JRU6, B1JARU6:	15 turns / 90º operation
B1JRU8, B1JARU8:	19 turns / 90º operation
B1JRU10, B1JARU10:	22 turns / 90º operation
B1JRU12, B1JARU12:	28 turns / 90º operation
B1JRU16, B1JARU16:	27 turns / 90º operation

Maintenance

CAUTION:
To release spring tension, always turn the handwheel to anti-clockwise end position before opening the cylinder fastening screws!

The cylinder has a warning plate (43), see Fig. 21. When servicing the unit, check that the plate is in place and legible. Also check that the cylinder has the arrow sticker indicating the spring operating direction.

Fig. 21 B1JR actuator warning plate

If air escapes between the spindle (50) and spindle nut (51), check the O-ring (54) and replace it if necessary. Also check the condition of the cylindrical roller (56). See Fig. 22. Other maintenance as described for the B1J actuator in Section 4.2.

NOTE:
Do not lift the actuator from the handwheel!

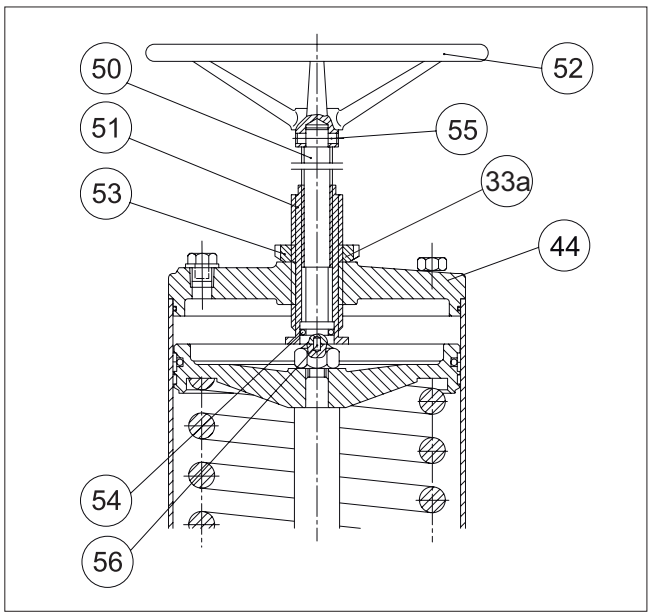

Fig. 22 B1JR actuator

Parts list for Fig. 22:

Part	Quantity	Name
33a	1	O-ring
44	1	Cylinder end
50	1	Spindle
51	1	Spindle nut
52	1	Hand wheel
53	1	Lock nut
54	1	O-ring
55	1	Spring pin
56	1	Cylindrical roller

Valve close and open position adjustment

In the B1JR actuator, unlike in the B1J, the upper valve position limit is adjusted with the spindle nut (51) secured with the lock nut (53). During adjusting, the spindle (50) must be in the extreme outer position.

B1JAR actuator

The B1JAR actuator is otherwise like the B1JA, except that it can be operated manually to bring the piston to the upper position against the spring in case there is no air supply. The B1JA actuator can be changed into a B1JAR by replacing the housing (1) and adding parts (50 to 56), see Fig. 24.

To make the change, the actuator must be dismantled, see Section 4.2.2. A special tool is needed to unscrew and fasten the lock nut (35) fastening the cylinder base to the housing. See Section 6.

Maintenance

CAUTION:
To release spring tension, always turn the handwheel to anti-clockwise end position before opening the cylinder fastening screws!

The cylinder has a warning plate (43). When servicing the unit, check that the plate is in place and legible, see Fig. 23. Also check that the cylinder has the arrow sticker indicating the spring operating direction.

Fig. 23 B1JAR actuator warning plate

If stiffness or noise occurs when the actuator is operated with the handwheel, check the condition of the bearings (56), see Fig. 24. Other maintenance as described for the B1JA actuator in Section 4.2.

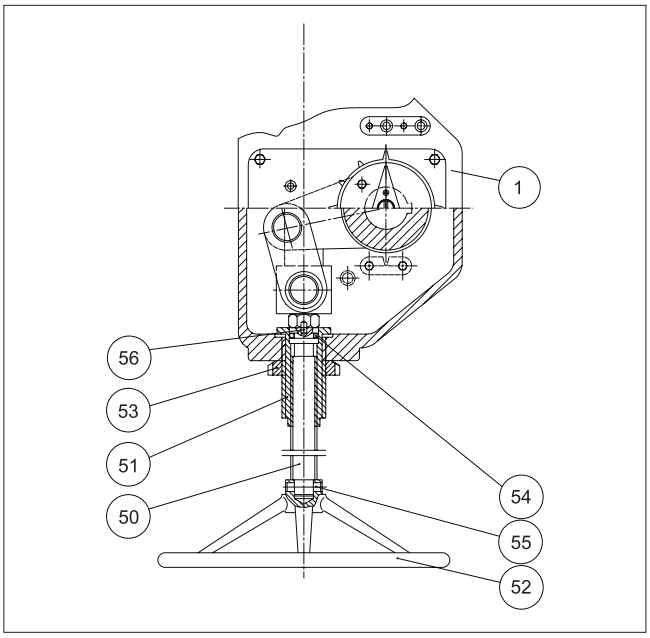

Fig. 24 B1JAR actuator

Parts list for Fig. 24:

Part	Quantity	Name
1	1	Housing
50	1	Spindle
51	1	Spindle nut
52	1	Hand wheel
53	1	Lock nut
54	1	O-ring
55	1	Spring pin
56	1	Cylindrical roller

Valve close and open position adjustment

In the B1JAR actuator, unlike in the B1JA, the lower valve position limit is adjusted with the spindle nut (51) secured with the lock nut (53). During adjusting, the spindle (50) must be in the extreme outer position.

4.6 B1JRR and B1JARR actuators

B1JRR actuator

The B1JRR actuator is otherwise like the B1J except that it can be operated manually to bring the piston to the lower position against the spring in case there is no air supply. Turning the handwheel clockwise opens the valve. The B1J actuator can be changed into a B1JRR by replacing the cylinder end (44) accordingly and adding parts (306 to 320), see Fig. 27.

NOTE:
There is some air bleed trough the spindle thread and the relief valve (58) when the sealing slide (15) with the O-rings (16) is positioned inside the cylinder. I.e. when the valve has been manually operated to open position during compressed air loss and then the air pressure is restored. To stop the leakage operate the manual override to closed position. See Fig. 25

The manual gear is disengaged when the handwheel is turned anti-clockwise to the extreme position:

B1JRRU20, B1JARRU20: 240 turns / 90º operation

B1JRRU25, B1JARRU25: 300 turns / 90º operation

B1JRRU32, B1JARRU32: 377 turns / 90º operation

B1JRRU40, B1JARRU40: 480 turns / 90º operation

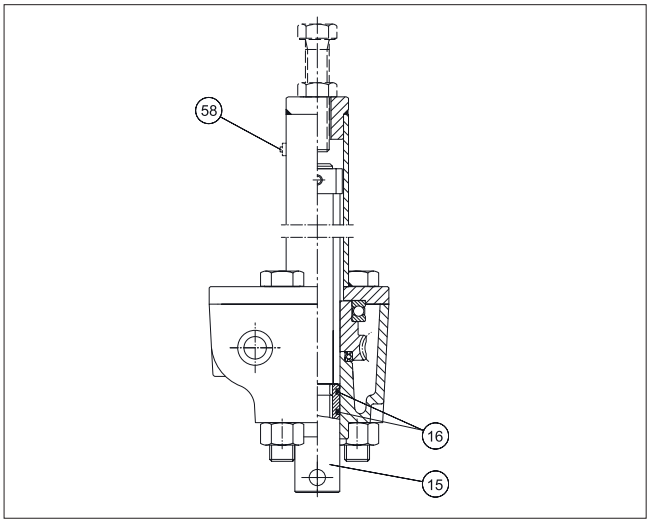

Fig. 25 Manual overdrive

Maintenance

CAUTION:
To release spring tension, always remove the screw (319) and nut (320) and turn the handwheel to anti-clockwise end position before opening the cylinder or gear fastening screws!

The cylinder has a warning plate (43), see Fig. 26. When servicing the unit, check that the plate is in place and legible. Also check that the cylinder has the arrow sticker indicating the spring operating direction.

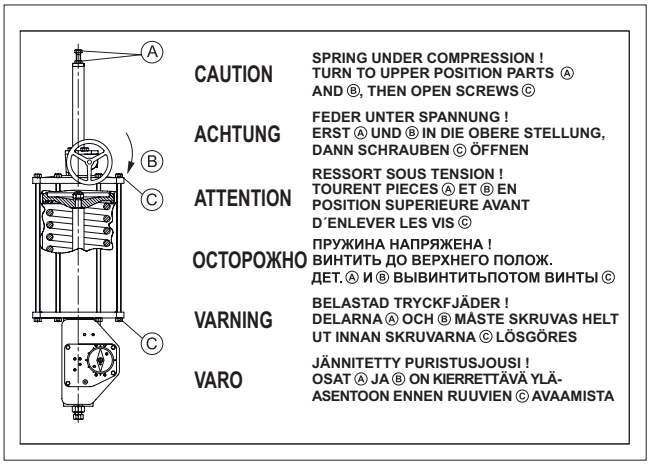

Fig. 26 B1JRR actuator warning plate

The manual override requires no regular maintenance. Grease can be added to the gear through the hole of the outermost fitting screw, if needed.

Other maintenance as described for the B1J actuator in Section 4.2.

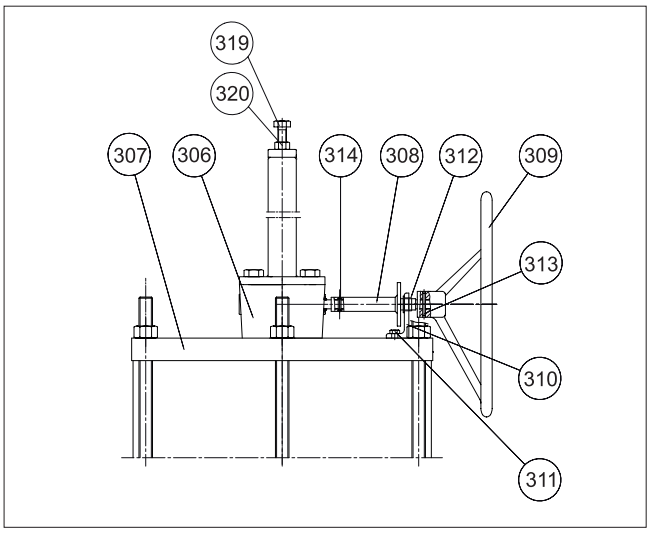

Fig. 27 B1JRR actuator

Parts list for Fig. 27:

Part	Quantity	Name
306	1	Manual overdrive
307	1	Cylinder end
308	1	Extension shaft
309	1	Handwheel
310	1	Support bracket
311	1	Hex screw
312	1	Bearing
313		Pin
314		Pin
319		Hex screw
320		Hex nut

Valve close and open position adjustment

In the B1JRR actuator the upper valve position limit is adjusted with the screw (319) and secured with the lock nut (320).

B1JARR actuator

The B1JARR actuator is otherwise like the B1JA, except that it can be operated manually to bring the piston to the upper position against the spring in case there is no air supply. Turning the handwheel clockwise closes the valve. The B1JA actuator can be changed into a B1JARR by replacing the housing (1) and adding parts (305 to 324), see Fig. 29.

To make the change, the actuator must be dismantled, see Section 4.2.2. A special tool is needed to unscrew and fasten the lock nut (35) fastening the cylinder base to the housing. See Section 6.

The manual gear is disengaged when the hand wheel is turned anti-clockwise to the extreme position:

Maintenance

CAUTION:
To release spring tension, always remove the screw (323) and nut (324) and turn the handwheel to anti-clockwise end position before opening the cylinder or gear fastening screws!

The cylinder has a warning plate (43). When servicing the unit, check that the plate is in place and legible, see Fig. 28. Also check that the cylinder has the arrow sticker indicating the spring operating direction.

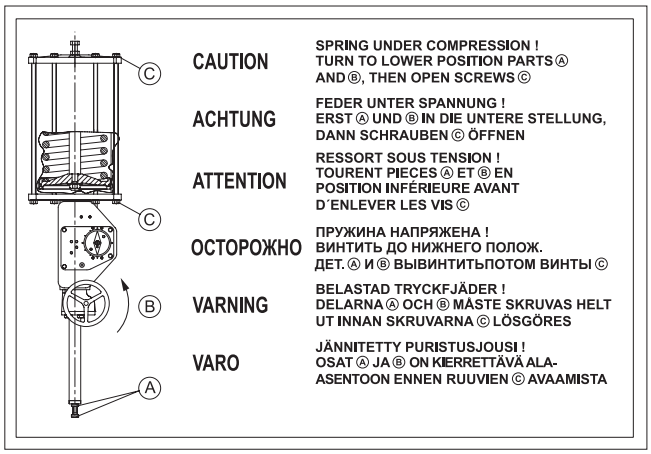

Fig. 28 B1JARR actuator warning plate

The manual override requires no regular maintenance. Grease can be added to the gear through the hole of the outermost fitting screw, if needed.

Other maintenance as described for the B1JA actuator in Section 4.2.

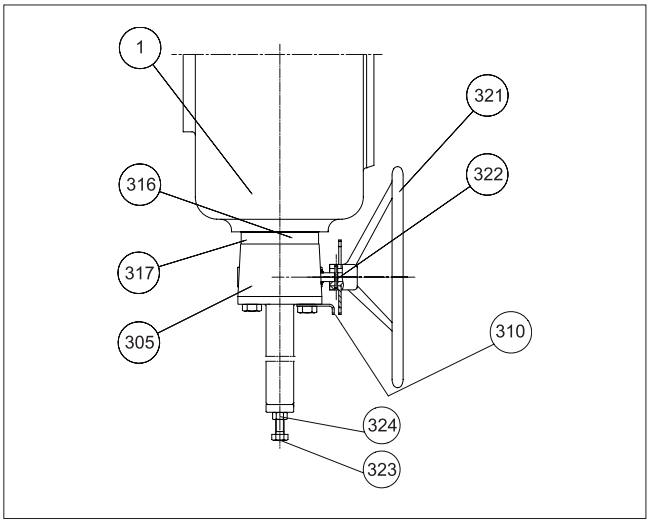

Fig. 29 B1JARR actuator

Parts list for Fig. 29:

Part	Quantity	Name
1	1	Housing
305	1	Manual overdrive
310	1	Support bracket
316	1	Fitting plate (size 20 only)
317	1	Socket screw (size 20 only)
321	1	Handwheel
322	1	Pin
323	1	Hex screw
324	1	Hex nut

Valve close and open position adjustment

In the B1JARR actuator, unlike in the B1JA, the lower valve position limit is adjusted with the screw (323) and secured with the lock nut (324).

4.7 B1JV and B1JK actuators

The actuators are otherwise like the B1J, except the B1JV has a more powerful spring yielding a 1.3 times higher torque, but also requiring a higher supply pressure. The B1JK has a lighter spring yielding a 0.7 times lower torque and reducing the supply pressure requirement. See Section 10.

Maintenance

See Section 4.2.

4.8 B1JVA and B1JKA actuators

The actuators are otherwise like the B1JA, except the B1JVA has a more powerful spring yielding a higher torque, but also requiring a higher supply pressure. The B1JKA has a lighter spring yielding a lower torque and reducing the supply pressure requirement. See Section 10.

Maintenance

See Section 4.3.

4.9 B1J 322 and B1JA 322 actuators

In principle, the structure of the B1J 322 and B1JA 322 actuators is similar to that of the B1J or B1JA actuators, respectively. To obtain a high operating torque, these devices are, however, equipped with two cylinders connected via a linkage to the secondary shaft. See Section 10.

The double cylinder actuator's gearbox is equipped with lifting lugs, which are designed only for actuator lifting. It is not permitted to lift the valve-actuator combination from the actuator only.

Maintenance

See Section 4.1 and 4.2 respectively.

NOTE:
For double cylinder actuators lifting tools are required during maintenance due to weight of components. Always plan how to lift safely. See appendix 1 for lifting safety.

4.10 B1J_H_ actuators

B1J_H_ actuators are provided with a manual hydraulic overdrive. The pneumatic cylinder is fitted with a manually operated hydraulic cylinder at the end of the piston rod. The correct mounting positions of the hydraulic pump unit are:

- horizontally (the lever arm on top) or
- vertically (the piston end pointing downwards)

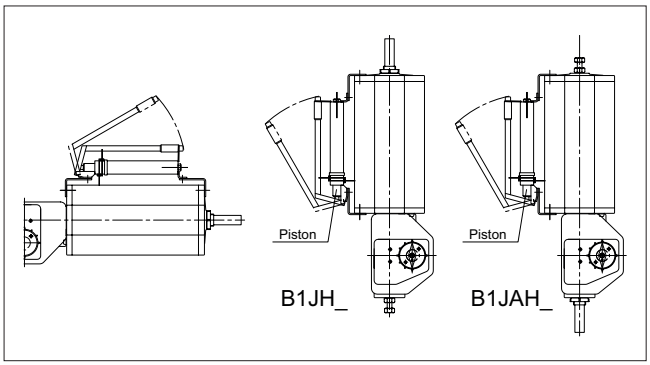

Fig. 30 B1J_H_ actuator, mounting positions

Maintenance

See Section 4.1 and 4.2 respectively.

5. MALFUNCTIONS

Table 6 lists malfunctions that might occur after prolonged use.

6. TOOLS

For maintenance of the actuator, you will need a few special tools in addition to the usual ones. The following can be ordered from the manufacturer:

- For actuator removal:
  - Extractor (Table 3)
- For piston seal installation:
  - Tie ring (Table 4)
- For cylinder base removal:
  - Lock nut key (Table 5)

Table 3 Extractor tools

Actuator size	Tool ID.
BC/BJ 6	303821
BC 9-11 / BJ 8-10	8546-1
BC 13-17 / BJ 12-16	8546-2
BC/BJ 20	8546-3
BC/BJ 25	8546-4
BC/BJ 32	8546-5
BC 40 / BJ 40 - 322	8546-6
BC 50	8546-7
BC 502	8546-8

Table 4 Mounting Collars

Actuator size	Tool ID.
BC 6-8 / BJ 6	7814-1
BC 9	7814-2
BC 11 / BJ 8	7814-3
BC 13 / BJ 10	7814-4
BC 17-20 / BJ 12	7814-5
BC 25 / BJ 16	7814-6
BC 32 / BJ 20	7814-7
BC 40 / BJ 25	7814-8
BC 50, 502 / BJ 32, 322	7814-9
BC 60, 602 cylinder Ø 600 / BJ 40	7814-10
BC 75, 752	7814-11

Table 5 Shaft nut tools

Actuator size	Tool ID.
BC/BJ 8	260155
BC 11 / BJ 10	260156
BC 13 / BJ 12	260157
BC 17 / BJ 16	260172
BC/BJ 20	260196
BC/BJ 25	260195
BC 32 / BJ 32, 322	261153
BC 40 / BJ 40	261154
BC 50, 502	261155

7. ORDERING SPARE PARTS

NOTE:
Only use spare parts provided by Valmet Flow Control to ensure proper functioning of the actuator.

When ordering spare parts, always include the following information:

- type code, sales order number, serial number
- number of the parts list, part number, name of the part and quantity required

This information can be found from the identification plate or documents.

NOTE:
All spare parts between the new B1 actuator model “B” and the earlier model “A” are interchangeable, but please use only model A or model B spare part kit as a complete package to ensure proper maintenance.
Only the model “B” soft spare parts are now provided from Valmet Flow Control, because they provide increased tightness and endurance for the B1 actuator.

Table 6 Possible malfunctions

Symptom	Possible cause	Action
Irregular or slow operation	Low supply pressure	Make sure that supply pressure complies with minimum torque required by valve. Check that supply air pipes are large enough.
	Positioner fault	Check positioner operation.
	Valve fault	Check that valve functions properly without actuator.
	Incorrect actuator rating	Contact manufacturer to check rating.
	Leak in piston or piston rod seal	Replace seals. See sect. 4.1 and 4.2., depending on actuator type.
	Cylinder damaged by impurities	Note installation position recommendation. Replace cylinder if damaged.
	Worn-out actuator bearings	Check bearings as in Sections 4.1 and 4.2, depending on actuator type. Replace bearings when necessary. If operating density is high, bearings and piston seals must be replaced regularly.
	Linkage corroded in harsh, humid conditions	Clean linkage and replace bearings. When necessary lubricate housing or fill with grease regularly as in Section 4.1.
	Bearing unit fastening screw loose	Tighten screw. Seal e.g. with Loctite 225 or equal liquid glue.
	Backlash in joint between actuator and valve	Replace parts as necessary.

8. EXPLODED VIEWS AND PARTS LISTS

8.1 Actuators B1J 6-20

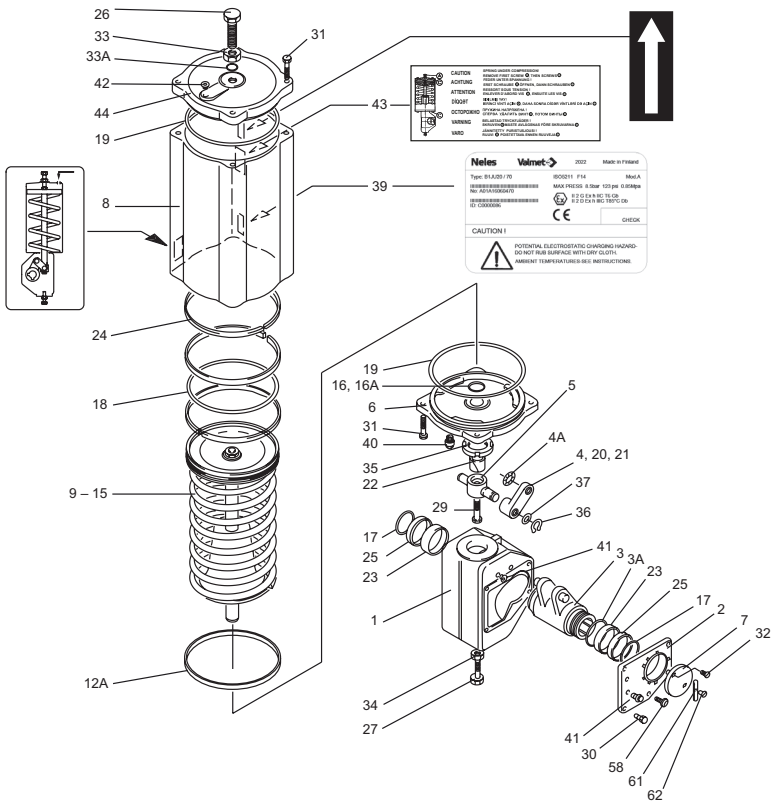

Parts for Arctic temperature design model B1J_/_A.
Special items with circled numbers.

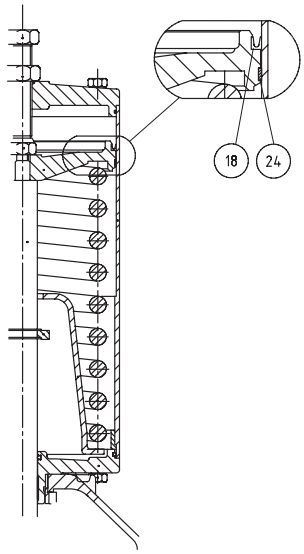

B1JU_/_A

Arctic design special items: 18, and 24.(*

Item	Qty	Description
18	2	Lip-seal
24	1	Piston ring

Item	Qty	Description	Spare part category
1	1	Housing	
2	1	Cover	
3	1	Lever arm	2
3A	1	Antistatic ring	2
4	2	Connection arm and bearings	2 **
4A ****	1	Antistatic ring	2 **
5	1	Bearing unit	2 **
6	1	Cylinder base	
7	1	Pointer cover	
8	1	Cylinder	3
9	1	Piston	***
10	1	Piston rod	***
11	1	Spring	***
12	1	Spring plate	***
13	1	Ring	***
14	2	Lock ring	***
15	1	Hexagon nut	***
16	1	O-ring	1 *
16A	1	O-ring	1 *
17	2	X-ring	1 *
18	1	O-ring	1 *
19	2	O-ring	1 *
20	2	Bearing	2 **
21	2	Bearing	2 **
22	1	Bearing	1 *
23	2	Bearing	1 *

Item	Qty	Description	Spare part category
24	3	Piston seal	1 *
25	2	Bushing	3
26	1	Stop screw	3 ****
27	1	Stop screw	3 ****
29	1	Screw	
30	4	Screw	
31	8, 12	Screw	
32	2	Screw	
33	1	Nut	3 ****
33A	1	O-ring	1 *
34	1	Nut	3 ****
35	1	Lock nut	
36	2	Lock ring	
37	2	Support ring	
39	1	ID plate	
40	1	Filter	
41	4	Plug	
42	1	Plug	
43	1	Warning plate	
44	1	Cylinder end	
58	1	Pressure outlet valve	1 *
61	1	Direction arrow	
62	1	Screw	

*) Delivered as a set
**) Leverage assembly, also available as separate part.
Parts 20 and 21 are not available separately. They are delivered with part 4 as a set only
***) Part of spring assembly (spare part category 3 set)
****) With long-run option

Spare part category 1: Recommended soft parts for basic maintenance
Spare part category 2: Leverage repair
Spare part category 3: Complete overhaul (for complete overhaul parts of all 3 categories are needed)

8.2 Actuators B1J 25-40

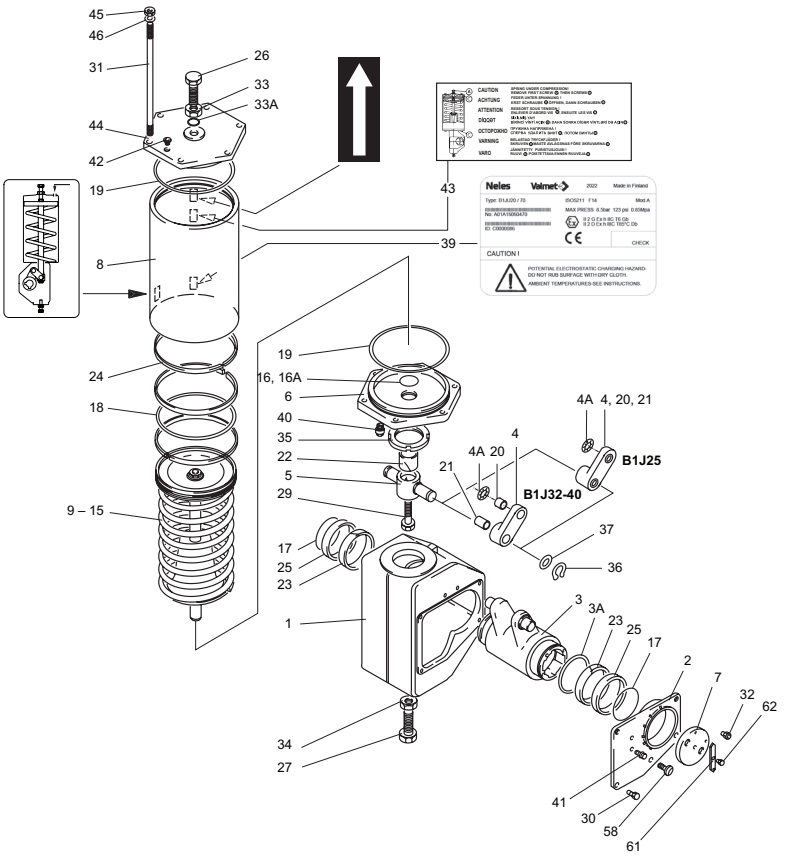

Item	Qty	Description	Spare part category
1	1	Housing	
2	1	Cover	
3	1	Lever arm	2 **
3A	1	Antistatic ring	2 **
4	2	Connection arm	2 **
4A ****	1	Antistatic ring	2 **
5	1	Bearing unit	2 **
6	1	Cylinder base	
7	1	Pointer cover	
8	1	Cylinder	3
9	1	Piston	***
10	1	Piston rod	***
11	1	Spring	***
12	1	Spring plate	***
13	1	Ring	***
14	2	Lock ring	***
15	1	Hexagon nut	***
16	1	O-ring	1 *
16A	1	O-ring	1 *
17	2	X-ring	1 *
18	1	O-ring	1 *
19	2	O-ring	1 *
20	2	Bearing	2 ** (size 32: 1 *)
21	2	Bearing	2 ** (size 32: 1 *)
22	1, 2	Bearing	1 *
23	2	Bearing	1 *
24	3, 4	Piston seal	1 *
25	2	Bushing	3

Item	Qty	Description	Spare part category
26	1	Stop screw	3 ****
27	1	Stop screw	3 ****
29	1	Screw	
30	4	Screw	
31	6	Stud	
32	2	Screw	
33	1	Nut	3 ****
33A	1	O-ring	1 *
34	1	Nut	3 ****
35	1	Lock nut	
36	2	Lock ring	
37	2	Support ring	
39	1	ID plate	
40	1	Filter	
41	4	Plug	
42	1	Plug	
43	1	Warning plate	
44	1	Cylinder end	
45	6	Nut	
46	6	Washer	
58	1	Pressure outlet valve	1 *
61	1	Direction arrow	
62	1	Screw	

*) Delivered as a set
**) Leverage assembly, also available as separate part.
Actuator size25: Parts 20 and 21 are not available separately.
They are delivered with part 4 as a set only.
***) Part of spring assembly (spare part category 3 set)
****) With long-run option

Spare part category 1: Recommended soft parts for basic maintenance
Spare part category 2: Leverage repair
Spare part category 3: Complete overhaul (for complete overhaul parts of all 3 categories are needed)

8.3 Actuator B1JU322

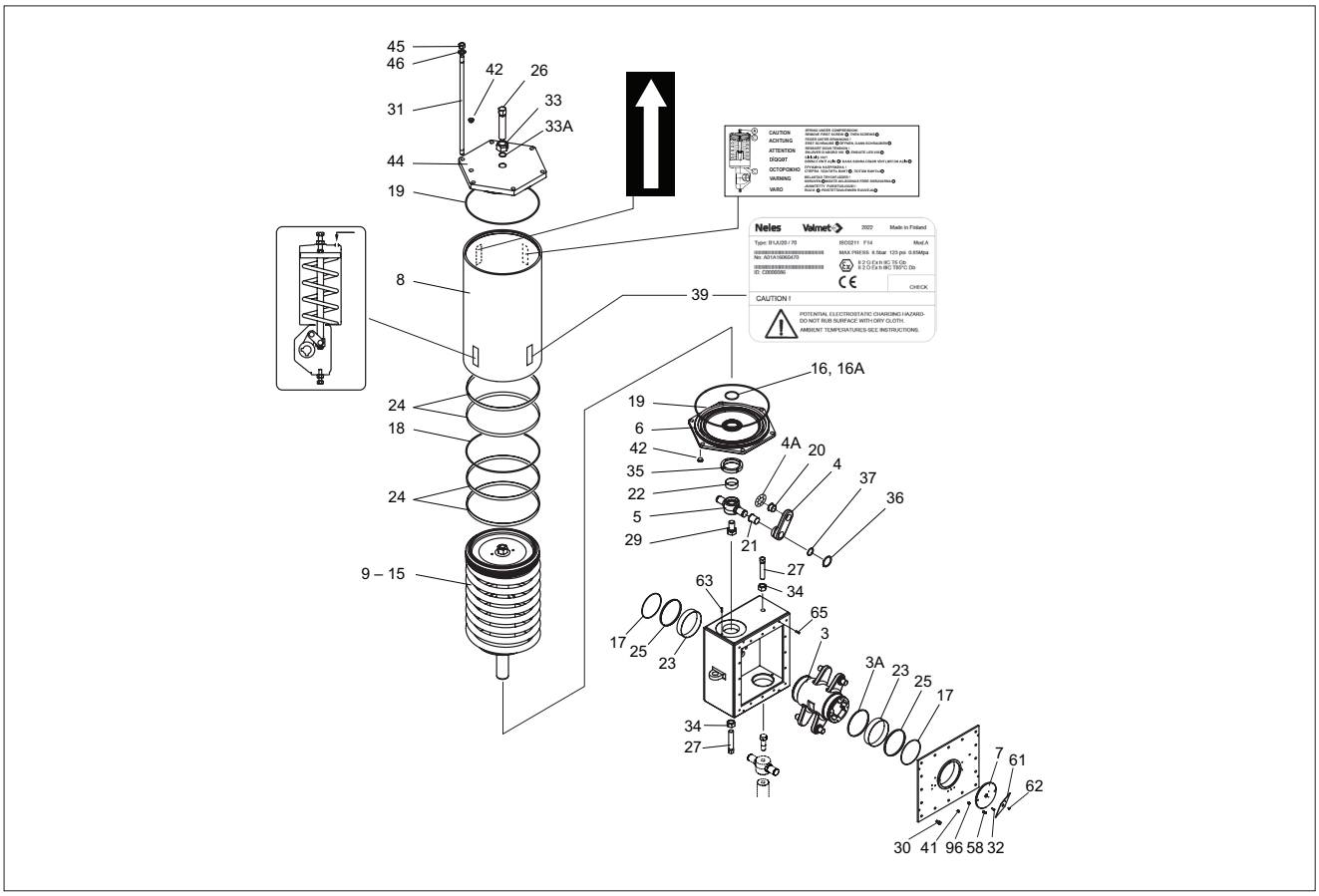

Item	Qty	Description	Spare part category
1	1	Housing	
2	1	Cover	
3	1	Lever arm	2 **
3A	1	Antistatic ring	2 **
4	4	Connection arm	2 **
4A	1	Antistatic ring	2 **
5	2	Bearing unit	2 **
6	2	Cylinder base	
7	1	Pointer cover	
8	2	Cylinder	3
9	2	Piston	***
10	2	Piston rod	***
11	2	Spring	***
12	1	Spring plate	***
13	2	Ring	***
14	4	Retainer ring	***
15	2	Hexagon nut	***
16	2	O-ring	1 *
16A	2	O-ring	1 *
17	2	X-ring	1 *
18	2	O-ring	1 *
19	4	O-ring	1 *
20	4	Bearing	1 *
21	4	Bearing	1 *
22	2	Bearing	1 *
23	2	Bearing	1 *
24	8	Piston seal	1 *
25	2	Bushing	3

Item	Qty	Description	Spare part category
26	2	Stop screw	3 ****
27	2	Stop screw	3 ****
29	2	Screw	
30	16	Screw	
31	12	Screw	
32	2	Screw	
33	2	Nut	3 ****
33A	2	O-ring	1 *
34	2	Nut	3 ****
35	2	Lock nut	
36	4	Lock ring	
37	4	Support ring	
39	1	ID plate	
40	2	Filter	
41	4	Plug	
42	2	Plug	
43	2	Warning plate	
44	2	Cylinder end	
45	2	Hexagon nut	
46	2	Washer	
58	1	Pressure outlet valve	1 *
61	1	Direction arrow	
62	2	Screw	
63	2	Pin	
65	4	Pin	
96	4	Screw	

*) Delivered as a set
**) Leverage assembly, also available as separate part
***) Part of spring assembly (spare part category 3 set)
****) With long-run option

Spare part category 1: Recommended soft parts for basic maintenance
Spare part category 2: Leverage repair
Spare part category 3: Complete overhaul (for complete overhaul parts of all 3 categories are needed)

8.4 Actuators B1JA 6-20

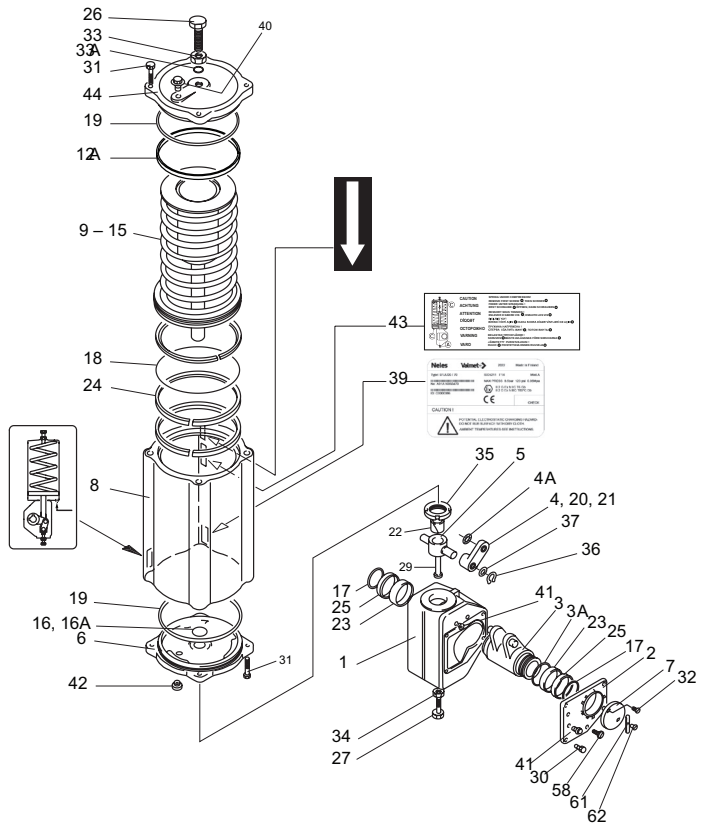

Parts for Arctic temperature design model B1JAU_/_A.
Special items with circled numbers.

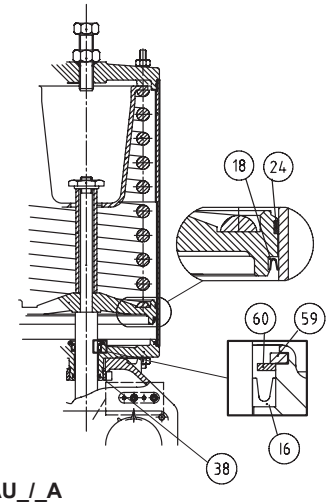

B1JAU_/_A

Arctic design special items: 16, 18, 24, 38, 59 and 60.(*

Item	Qty	Description
16	1	Lip-seal
18	2	Lip-seal
24	1	Piston ring
38	1	O-ring
59	1	Retainer ring
60	1	Spacer ring

Item	Qty	Description	Spare part category
1	1	Housing	
2	1	Cover	
3	1	Lever arm	2 **
3A	1	Antistatic ring	2 **
4	2	Connection arm	2 **
4A ****	1	Antistatic ring	2 **
5	1	Bearing unit	2 **
6	1	Cylinder base	
7	1	Pointer cover	
8	1	Cylinder	3
9	1	Piston	***
10	1	Piston rod	***
11	1	Spring	***
12	1	Spring plate	***
13	1	Clamping tube	***
15	1	Hexagon nut	***
16	1	O-ring	1 *
16A	1	O-ring	1 *
17	2	X-ring	1 *
18	1	O-ring	1 *
19	2	O-ring	1 *
20	2	Bearing	2 **
21	2	Bearing	2 **
22	1	Bearing	1 *
23	2	Bearing	1 *
24	3	Piston seal	1 *

Item	Qty	Description	Spare part category
25	2	Bushing	3
26	1	Stop screw	3 ****
27	1	Stop screw	3 ****
29	1	Screw	
30	4	Screw	
31	8, 12	Screw	
32	2	Screw	
33	1	Nut	3 ****
33A	1	O-ring	1 *
34	1	Nut	3 ****
35	1	Lock nut	
36	2	Lock ring	
37	2	Support ring	
39	1	ID plate	
40	1	Filter	
41	4	Plug	
42	1	Plug	
43	1	Warning plate	
44	1	Cylinder end	
58	1	Pressure outlet valve	1 *
61	1	Direction arrow	
62	1	Screw	

*) Delivered as a set
**) Leverage assembly, also available as separate part
Actuator sizes 8–20: Parts 20 and 21 are not available separately. They are delivered with part 4 as a set only.
***) Part of spring assembly (spare part category 3 set)
****) With long-run option

Spare part category 1: Recommended soft parts for basic maintenance
Spare part category 2: Leverage repair
Spare part category 3: Complete overhaul (for complete overhaul parts of all 3 categories are needed)

8.5 Actuator B1JA 25-40

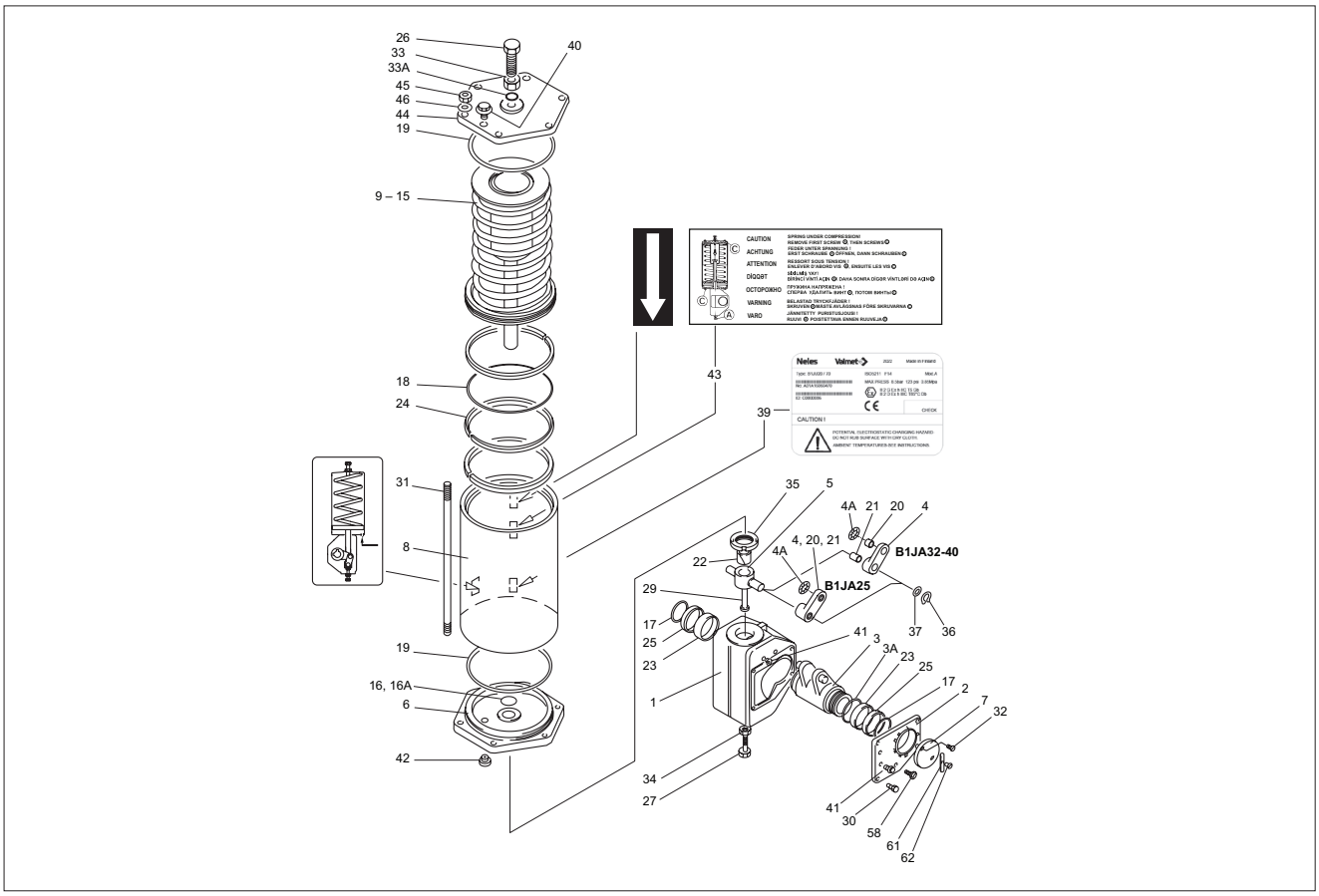

Item	Qty	Description	Spare part category
1	1	Housing	
2	1	Cover	
3	1	Lever arm	2 **
3A	1	Antistatic ring	2 **
4	2	Connection arm	2 **
4A ****	1	Antistatic ring	2 **
5	1	Bearing unit	2 **
6	1	Cylinder base	
7	1	Pointer cover	
8	1	Cylinder	3
9	1	Piston	***
10	1	Piston rod	***
11	1	Spring	***
12	1	Spring plate	***
13	1	Clamping tube	***
15	1	Hexagon nut	***
16	1	O-ring	1 *
16A	1	O-ring	1 *
17	2	X-ring	1 *
18	1	O-ring	1 *
19	2	O-ring	1 *
20	2	Bearing	2 ** size 32: 1 *
21	2	Bearing	2 ** size 32: 1 *
22	1, 2	Bearing	1 *
23	2	Bearing	1 *
24	3, 4	Piston seal	1 *
25	2	Bushing	3
26	1	Stop screw	3 ****

Item	Qty	Description	Spare part category
27	1	Stop screw	3 ****
29	1	Screw	
30	4	Screw	
31	6	Stud	
32	2	Screw	
33	1	Nut	3 ****
33A	1	O-ring	1 *
34	1	Nut	3 ****
35	1	Lock nut	
36	2	Lock ring	
37	2	Support ring	
39	1	ID plate	
40	1	Filter	
41	4	Plug	
42	1	Plug	
43	1	Warning plate	
44	1	Cylinder end	
45	6	Nut	
46	6	Washer	
58	1	Pressure outlet valve	1 *
61	1	Direction arrow	
62	1	Screw	

*) Delivered as a set
**) Leverage assembly, also available as separate part.
Actuator size 25: Parts 20 and 21 are not available separately.
They are delivered with part 4 as a set only.
***) Part of spring assembly (spare part category 3 set)
****) With long-run option

Spare part category 1: Recommended soft parts for basic maintenance
Spare part category 2: Leverage repair
Spare part category 3: Complete overhaul (for complete overhaul parts of all 3 categories are needed)

8.6 Actuator B1JAU 322

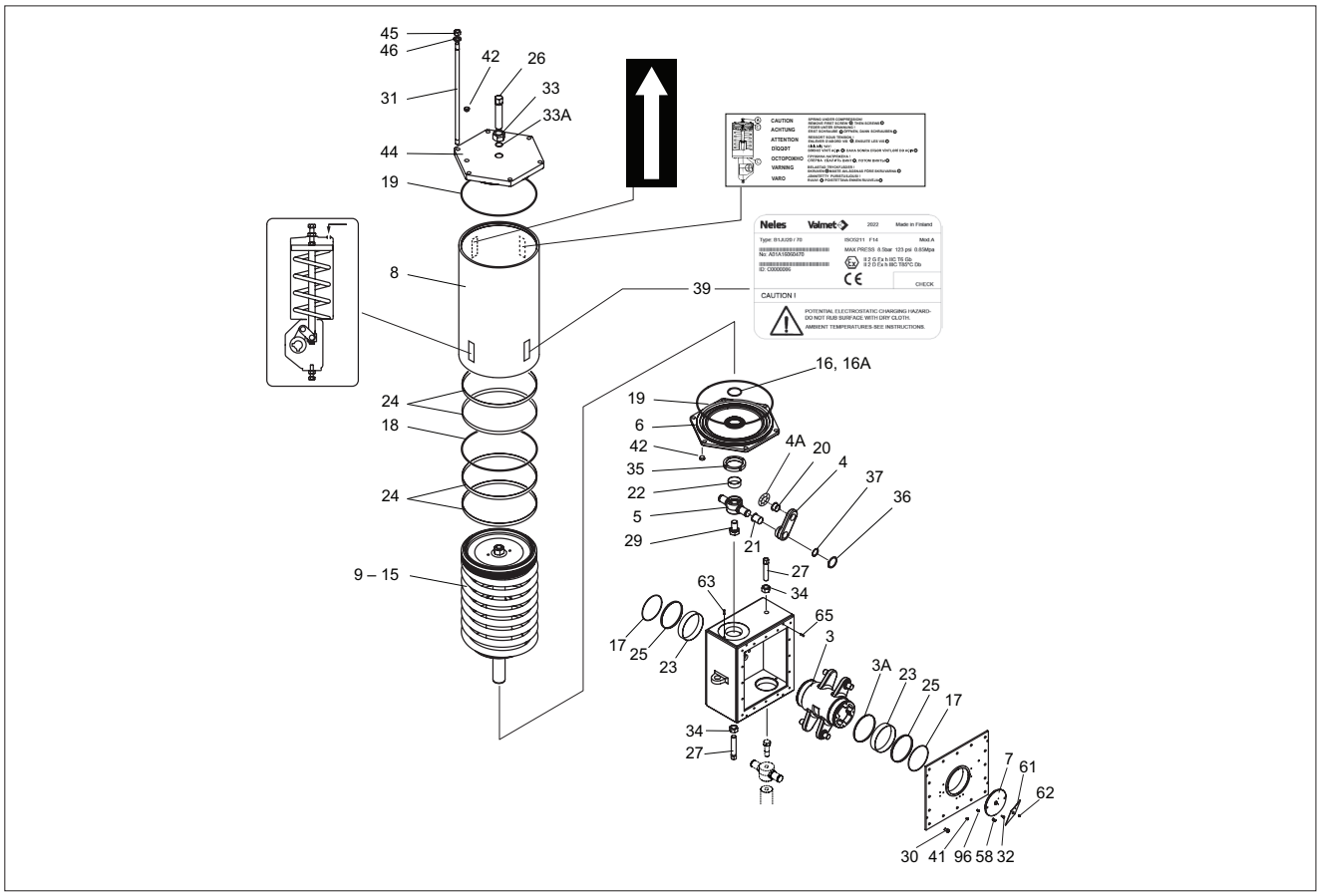

Item	Qty	Description	Spare part category
1	1	Housing	
2	1	Cover	
3	1	Lever arm	2 **
3A	1	Antistatic ring	2 **
4	4	Connection arm	2 **
4A	1	Antistatic ring	2 **
5	2	Bearing unit	2 **
6	2	Cylinder base	
7	1	Pointer cover	
8	2	Cylinder	3
9	2	Piston	***
10	2	Piston rod	***
11	2	Spring	***
12	1	Spring plate	***
13	2	Ring	***
15	2	Hexagon nut	***
16	2	O-ring	1 *
16A	2	O-ring	1 *
17	2	X-ring	1 *
18	2	O-ring	1 *
19	4	O-ring	1 *
20	4	Bearing	1 *
21	4	Bearing	1 *
22	2	Bearing	1 *
23	2	Bearing	1 *
24	8	Piston seal	1 *
25	2	Bushing	3
26	2	Stop screw	3 ****

Item	Qty	Description	Spare part category
27	2	Stop screw	3 ****
29	2	Screw	
30	16	Screw	
31	12	Stud	
32	2	Screw	
33	2	Nut	3 ****
33A	2	O-ring	1 *
34	2	Nut	3 ****
35	2	Lock nut	
36	4	Lock ring	
37	4	Support ring	
39	1	ID plate	
40	2	Filter	
41	4	Plug	
42	2	Plug	
43	2	Warning plate	
44	2	Cylinder end	
45	2	Hexagon nut	
46	2	Washer	
58	1	Pressure outlet valve	1 *
61	1	Direction arrow	
62	2	Screw	
63	2	Pin	
65	4	Pin	
96	4	Screw	

*) Delivered as a set
**) Leverage assembly, also available as separate part
***) Part of spring assembly (spare part category 3 set)
****) With long-run option

Spare part category 1: Recommended soft parts for basic maintenance
Spare part category 2: Leverage repair
Spare part category 3: Complete overhaul (for complete overhaul parts of all 3 categories are needed)

9. DIMENSIONS AND WEIGHTS

9.1 Actuators B1J, B1JA

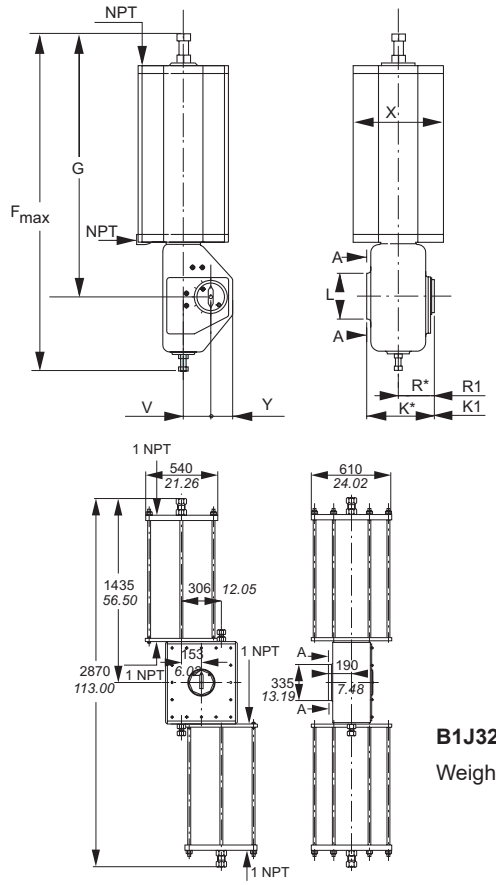

Type	Dimensions, mm								NPT	kg
	X	G	F	V	Y	L	K1	R1*		
B1J, B1JA6	110	368	485	36	47	70	138	80	3/8	13
B1J, B1JA8	135	420	555	43	50	80	140	81	3/8	17
B1J, B1JA10	175	480	640	51	50	95	154	89	3/8	30
B1J, B1JA12	215	620	815	65	65	117	190	109	1/2	57
B1J, B1JA16	265	760	990	78	70	137	222	126	1/2	100
B1J, B1JA20	395	940	1230	97	80	145	262	147	3/4	175
B1J, B1JA25	505	1140	1490	121	110	176	304	166	3/4	350
B1J, B1JA32	540	1435	1885	153	146	280	379	204	1	671
B1J, B1JA40	724	1578	2095	194	185	335	445	220	1	1100

Type	Dimensions, in								NPT	lb
	X	G	F	V	Y	L	K1	R1*		
B1J, B1JA6	4.33	14.49	19.09	1.42	1.85	2.76	5.43	3.15	3/8	28.5
B1J, B1JA8	5.31	16.50	21.90	1.69	1.97	3.15	5.51	3.19	3/8	37
B1J, B1JA10	6.89	18.90	25.20	2.01	1.97	3.74	6.06	3.50	3/8	66
B1J, B1JA12	8.46	24.40	32.10	2.56	2.56	4.60	7.48	4.29	1/2	126
B1J, B1JA16	10.43	29.90	38.00	3.07	2.76	5.39	8.74	4.96	1/2	220
B1J, B1JA20	15.55	37.00	48.40	3.82	3.15	5.71	10.31	5.79	3/4	386
B1J, B1JA25	19.88	44.90	58.70	4.76	4.33	6.93	11.97	6.54	3/4	771
B1J, B1JA32	21.26	56.50	74.20	6.02	5.75	11.0	14.92	8.03	1	1479
B1J, B1JA40	28.5	62.13	82.48	7.64	7.28	13.19	17.52	8.66	1	2424

B1J322

Weight: 1650 kg / 3630 lb

9.2 Actuator B1JR / B1JRR

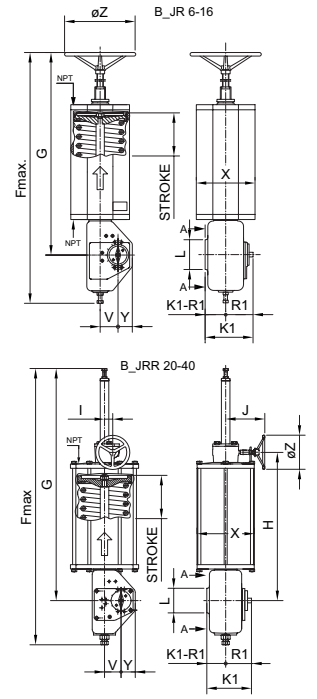

Type	Dimensions, mm												NPT	kg
	X	Z	G	F	H	I	J	V	Y	L	K1	R1		
B1JR6	110	250	520	640	—	—	—	36	47	70	138	80	3/8	15.5
B1JR8	135	250	570	705	—	—	—	43	50	80	140	81	3/8	19
B1JR10	175	250	695	855	—	—	—	51	50	95	154	89	3/8	33
B1JR12	215	250	805	1000	—	—	—	65	65	120	190	109	1/2	60
B1JR16	265	400	1080	1310	—	—	—	78	70	137	222	126	1/2	106
B1JRR20	395	250	1455	1745	868	48.25	230	97	80	145	262	147	3/4	210
B1JRR25	505	250	1665	2015	1074	48.25	280	121	110	180	304	166	3/4	380
B1JRR32	540	400	1895	2345	1306	48.25	375	153	146	280	379	204	1	705
B1JRR40	724	400	2193	2710	1516	48.25	445	194	185	335	445	20	1	1130

Type	Dimensions, in												NPT	lb
	X	Z	G	F	H	I	J	V	Y	L	K1	R1		
B1JR6	4.33	9.84	20.47	25.20	—	—	—	1.42	1.85	2.76	5.43	3.15	3/8	34
B1JR8	5.3	9.8	22.4	27.8	—	—	—	1.7	2.0	3.1	5.5	3.2	3/8	42
B1JR10	6.9	9.8	27.4	33.7	—	—	—	2.0	2.0	3.7	6.1	3.5	3/8	73
B1JR12	8.5	9.8	31.7	39.4	—	—	—	2.6	2.6	4.7	7.5	4.3	1/2	132
B1JR16	10.4	15.7	42.5	51.6	—	—	—	3.1	2.8	5.4	8.7	5.0	1/2	233
B1JRR20	15.6	9.8	57.3	68.7	34.2	1.9	9.1	3.8	3.1	5.7	10.3	5.8	3/4	463
B1JRR25	19.9	9.8	65.6	79.3	42.3	1.9	11.0	4.8	4.3	7.1	12.0	6.5	3/4	837
B1JRR32	21.3	15.7	74.6	92.3	51.4	1.9	14.8	6.0	5.75	11.0	14.9	8.0	1	1553
B1JRR40	28.5	15.7	86.3	106.7	59.7	1.9	17.5	7.6	7.3	13.2	17.5	8.7	1	2489

9.3 Actuator B1JAR / B1JARR

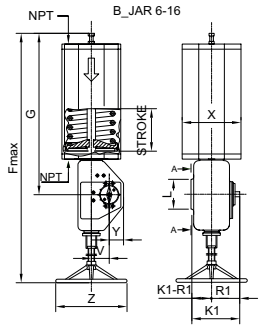

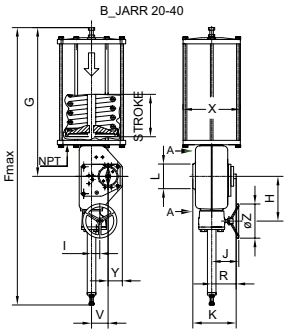

Type	Dimensions, mm												NPT	kg
	X	Z	G	F	H	I	J	V	Y	L	K1	R1		
B1JAR6	110	250	367	655	—	—	—	36	47	70	138	80	3/8	15.5
B1JAR8	135	250	420	720	—	—	—	43	50	80	140	81	3/8	20
B1JAR10	175	250	480	870	—	—	—	51	50	95	154	89	3/8	30
B1JAR12	215	250	620	1030	—	—	—	65	65	120	190	109	1/2	55
B1JAR16	265	400	760	1345	—	—	—	78	70	137	222	126	1/2	100
B1JARR20	395	250	940	1785	285	48.25	175	97	80	145	262	147	3/4	210
B1JARR25	505	250	1140	2025	314	48.25	185	121	110	180	304	166	3/4	380
B1JARR32	540	400	1435	2385	381	48.25	240	153	146	280	379	204	1	705
B1JARR40	724	400	1578	2748	443	48.25	294	194	185	335	445	220	1	1130

Type	Dimensions, in												NPT	lb
	X	Z	G	F	H	I	J	V	Y	L	K1	R1		
B1JAR6	4.33	9.84	14.45	25.79	—	—	—	1.42	1.85	2.76	5.43	3.15	3/8	34
B1JAR8	5.3	9.8	16.5	28.3	—	—	—	1.7	2.0	3.1	5.5	3.2	3/8	44
B1JAR10	6.9	9.8	18.9	34.3	—	—	—	2.0	2.0	3.7	6.1	3.5	3/8	66
B1JAR12	8.5	9.8	24.4	40.6	—	—	—	2.6	2.6	4.7	7.5	4.3	1/2	121
B1JAR16	10.4	15.7	29.9	53.0	—	—	—	3.1	2.8	5.4	8.7	5.0	1/2	220
B1JARR20	15.6	9.8	37.0	70.3	11.2	1.9	6.9	3.8	3.1	5.7	10.3	5.8	3/4	463
B1JARR25	19.9	9.8	44.9	79.7	12.4	1.9	7.3	4.8	4.3	7.1	12.0	6.5	3/4	837
B1JARR32	21.3	15.7	56.5	93.9	15.0	1.9	9.4	6.0	5.75	11.0	14.9	8.0	1	1553
B1JARR40	28.5	15.7	62.1	108.2	17.4	1.9	11.6	7.6	7.3	13.2	17.5	8.7	1	2489

9.4 Attachment dimensions

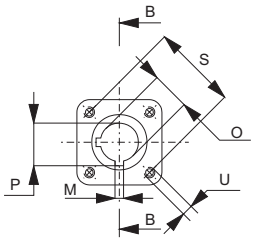

B1J6...25

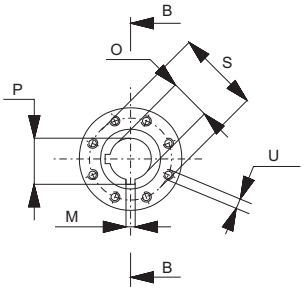

B1J32, 322

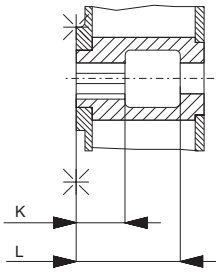

B1J	Dimensions, mm								Mounting face
	O (H8)	M	P	K (keyway)	L	S	U	N (pcs.)	
6	15 20 25	4.76 4.76 6.35	17.0 23.3 27.9	40	90	50	M6	4	F05
6	15 20 25	4.76 4.76 6.35	17.0 23.3 27.9	40	90	70	M8	4	F07
8	15 20 25 35	4.76 4.76 6.35 9.52	17.0 23.3 27.9 39.3	50	90	70	M8	4	F07
10	20 25 35 40	4.76 6.35 9.52 9.52	23.3 27.9 39.3 44.4	60	105	102	M10	4	F10
12	55	12.70	60.8	75	160	125	M12	4	F12
16	55	12.70	60.8	80	120	140	M16	4	F14
20	70	19.05	78.3	105	195	140	M16	4	F14
25	95	22.22	105.5	140	235	165	M20	4	F16
32	105	25.40	116.3	155	280	254	M16	8	F25
40	95 105 120	22.22 25.40 31.75	105.5 116.3 133.9	180	340	298	M20	8	F30
322	95 105 120	22.22 25.40 31.75	105.5 116.3 133.9	180	320	298	M20	8	F30

B1J	Dimensions, in								Mounting face
	O (H8)	M	P	K (keyway)	L	S	U	N (pcs.)	
6	0.59 0.79 0.98	0.19 0.19 0.25	0.67 0.92 1.10	1.57	3.54	1.97	M6	4	F05
6	0.59 0.79 0.98	0.19 0.19 0.25	0.67 0.92 1.10	1.57	3.54	2.76	M8	4	F07
8	0.59 0.79 0.98 1.38	0.19 0.19 0.25 0.37	0.67 0.92 1.10 1.55	1.97	3.54	2.76	M8	4	F07
10	0.79 0.98 1.38 1.57	0.19 0.25 0.37 0.37	0.92 1.10 1.55 1.75	2.36	4.13	4.02	M10	4	F10
12	2.17	0.50	2.39	2.95	6.30	4.92	M12	4	F12
16	2.17	0.50	2.39	3.15	4.72	5.51	M16	4	F14
20	2.76	0.75	3.08	4.13	7.68	5.51	M16	4	F14
25	3.74	0.87	4.15	5.51	9.25	6.50	M20	4	F16
32	4.13	1.00	4.58	6.10	11.02	10.00	M16	8	F25
40	3.74 4.13 4.72	0.87 1.00 1.25	4.15 4.58 5.27	7.09	13.39	11.73	M20	8	F30
322	3.74 4.13 4.72	0.87 1.00 1.25	4.15 4.58 5.27	7.09	12.60	11.73	M20	8	F30

9.5 Center of gravity

For lifting safety: below is provided information about center of gravity of B1J series actuators.

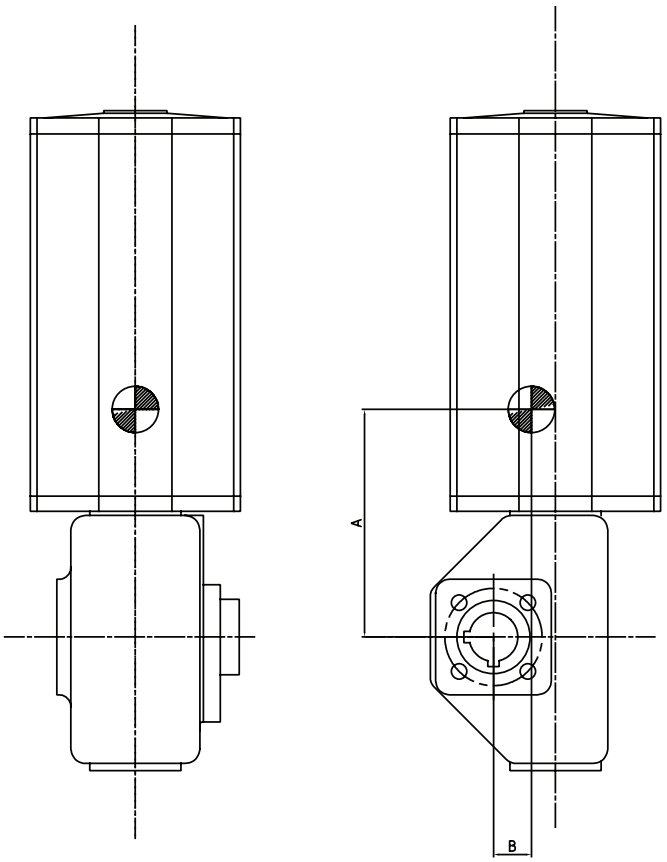

ALUMINIUM CYLINDER

BJ	A	B	W/Kg
BJ 6	121	28	13
BJ 8	136	35	17
BJ 10	182	43	30
BJ 12	243	56	57
BJ 16	301	67	100
BJ 20	381	85	175
BJ 25	486	107	350
BJ 32	622	134	671
BJ 40	679	171	1100
BJ 322	0	0	957

BJA	A	B	W/Kg
BJA 6	112	28	13
BJA 8	131	36	17
BJA 10	180	44	30
BJA 12	245	57	57
BJ A16	306	68	100
BJA 20	365	86	175
BJA 25	465	109	350
BJ 32	574	136	671
BJA 40	615	173	1100
BJA 322	0	0	1010

STEEL CYLINDER

BJS	A	B	W/Kg
BJS 6	125	28	14
BJS 8	142	36	18
BJS 10	186	44	32
BJS 12	248	56	60
BJS 16	307	68	106
BJS 20	385	86	181
BJS 25	498	109	381
BJS 32	634	136	728
BJS 40	700	173	1210
BJS 322	0	0	1160

BJAS	A	B	W/Kg
BJAS 6	120	28	14
BJAS 8	138	36	18
BJAS 10	184	44	32
BJAS 12	249	57	60
BJAS 16	311	69	106
BJAS 20	368	87	181
BJAS 25	474	110	381
BJAS 32	584	137	728
BJAS 40	646	175	1210
BJAS 322	0	0	1212

ALUMINIUM CYLINDER

BJH	A	B	W/Kg
BJH 10	180	45	41
BJH 12	232	57	68
BJH 16	288	68	111
BJH 25	476	107	361
BJH 322	0	0	1021

BJAH	A	B	W/Kg
BJAH 10	178	46	41
BJAH 12	234	58	68
BJAH 16	293	69	111
BJAH 25	456	109	361

BJR/RR	A	B	W/Kg
BJR 6	177	30	19
BJR 8	178	37	24
BJR 10	215	44	33
BJR 12	260	56	60
BJR 16	312	67	103
BJRR 20	413	89	187
BJRR 25	505	111	362
BJRR 32	633	136	683
BJRR 40	686	172	1113

BJAR/RR	A	B	W/Kg
BJAR 6	37	33	20
BJAR 8	61	38	20
BJAR 10	131	46	33
BJAR 12	213	58	60
BJAR 16	281	69	104
BJARR 20	316	90	187
BJARR 25	434	113	362
BJARR 32	554	138	683
BJARR 40	602	174	1113

STEEL CYLINDER

BJSH	A	B	W/Kg
BJSH 10	183	46	43
BJSH 12	237	57	71
BJSH 16	294	69	117
BJSH 25	489	109	392

BJAH	A	B	W/Kg
BJASH 10	137	33	43
BJASH 12	210	48	71
BJASH 16	282	63	117
BJASH 25	461	107	392

BJSR/RR	A	B	W/Kg
BJSR 6	177	30	20
BJSR 8	180	38	25
BJSR 10	217	45	35
BJSR 12	264	56	63
BJSR 16	317	68	109
BJSRR 20	415	90	193
BJSRR 25	515	112	393
BJSRR 32	644	138	740
BJSRR 40	706	174	1222

BJASR/RR	A	B	W/Kg
BJASR 6	46	33	21
BJASR 8	70	38	21
BJASR 10	137	46	35
BJASR 12	218	58	63
BJASR 16	288	70	110
BJASRR 20	320	91	193
BJASRR 25	445	113	393
BJASRR 32	566	139	740
BJASRR 40	634	176	1222

10. EU DECLARATION OF CONFORMITY

EU DECLARATION OF CONFORMITY

Manufacturer:
Valmet Flow Control Oy,
Vantaa, Finland
*Valmet Flow Control (Jiaxing) Co., Ltd.,
China
*) Also manufactures certain series

EU Authorised Representative: Valmet Flow Control Oy, Vanha Porvoontie 229, 01380 Vantaa, Finland.
Contact details: +358 10 417 5000

Product: Pneumatic actuator	
Type: B1C- and B1J-series	
ATEX group and category:	Ex II 2 GD
Protection concept of non-electrical equipment	
70°C:	Ex h IIC T6 Gb/ Ex h IIIC T85°C Db
120°C:	Ex h IIC T6…T4 Gb/ Ex h IIIC T85°C…T120°C Db

ATEX 2014/34/EU Annex VIII technical files are archived by Notified Body number 0537.

Manufacturer's certificates:

Standard / Directive	Notified Body and NoBo number	Certificate No.
ISO 9001:2015	LRQA (Certification Body)	00029133 (Approval No.)
ATEX 2014/34/EU Annex IV	DNV Product Assurance AS Norway 2460	Presafe 18 ATEX 91983Q Issue 6

Applicable Directives:

Machinery 2006/42/EC Annex IIB	Actuator
ATEX 2014/34/EU	Non-electrical equipment

As the products within our sole responsibility of design and manufacture may be used as parts or components in machinery and are not alone performing functions as described in Article 6(2) of Machinery Directive 2006/42/EC, we declare that our product(s) to which this Declaration of Conformity relates must not be put into service until the relevant machinery into which it is to be incorporated has been declared in conformity with the provisions of the Machinery Directive.

The product above is manufactured in compliance with the applicable European directives and technical specifications/ standards. The product is in conformity with the customer order.

Non-electrical equipment is according EN 80079-37:2016 and EN 80079-36:2016. The actual surface temperature of non-electrical equipment is depended on the process and ambient conditions (EN 80079-36:2016 § 6.2.5 and 6.2.7). The protection from high or low temperature must be considered by the end user before put into service.

Protection from e.g. static electricity caused by the process or connected equipment must be considered by the user (EN 60079-14 § 6). Follow the caution instruction in identification plate sticker and instruction manual.

The product does not possess any residual risk according to hazard analysis conducted under the applicable directives providing that the procedures stated by the IMO (Installation, Maintenance and Operating) instructions manual are followed and the product is used under conditions mentioned in the technical specifications.

.
Vantaa 1.10.2025

Matti Rousku, Quality Director

11. TYPE CODE

Pneumatic spring-return cylinder actuator, B1J											
1.	**2.**	**3.**	**4.**	**5.**	**6.**	**7.**	**8.**	**9.**	**10.**	**11.**	**12.**
B1	J	K	A	R	S	W	U	20/70	H	E	Z

1.	Product group
B1	Cylinder actuator with attachment dimensions acc. ISO 5211

2.	Series
J	Pneumatic, spring-return, protection class IP66.

3.	Spring option
-	Standard construction without sign
K	Light spring
V	Strong spring

4.	Function code
-	Spring-to-close operation without sign
A	Spring-to-open operation

5.	Construction
-	Standard construction without sign
R	Secondary handwheel for manual operation (sizes 6-16)
RR	Secondary handwheel with wormgear (sizes 20 - 40)
H	Manual hydraulic override (excl. size 6 & if sign 10. is “A”)

6.	Cylinder and housing materials
-	Aluminium cylinder and EN 1561-GJL-200 housing, standard materials without sign. Except if sign 10. is arctic version “A” then housing and piston always EN 1563-GJS-400-15.
S	Carbon steel cylinder and EN 1561-GJL-200 housing and piston. Except if sign 10. is arctic version “A” then housing and piston always EN 1563-GJS-400-15.
B	Aluminium cylinder and EN 1563-GJS-400-15 housing and piston.
X	Carbon steel cylinder and EN 1563-GJS-400-15 housing and piston

7.	Special construction
-	Standard construction without sign
D	Simple service lock-to-close device at housing end. Safety locking during maintenance to **close** position with padlock.
Q	Service lock-up device for housing end. Safe locking during maintenance to **close** position.
W	Service lock-up device for cylinder end. Safe locking during maintenance to **open** position.
QW	Service lock-up device for cylinder and housing end. Safe locking during maintenance to **open and close** position.
T	Actuator equipped with manual latching device. The actuator can be locked in series B1J for **open** position and in series B1JA for **closed** position allowing about 20 degrees’ motion (size 6 excluded).
Z	Shock absorber on cylinder end (-20 ... +120 °C)
N	Shock absorber on housing end (-20 ... +120 °C)
Y	Special construction

8.	Interface for additional devices (positioner, limit switch)
U	Interface according to VDI / VDE 3845, standard construction.

9.	Actuator size
	6/15 6/20 6/25 - 8/15 8/20 8/25 8/35 - 10/20 10/25 10/35 10/40 - 12/55 - 16/55 - 20/70 25/95 - 32/105 - 40/95 40/105 40/120 - 322/95 322/105 322/120
	E.g. 20/70 = actuator size / shaft bore diameter

10.	Materials of seals and bearings (all versions ATEX II 2 G/D h and ATEX II 3 G/D h)
-	Standard construction without sign (-20° to +70 °C)
HL	For temperatures -20... +120 °C and long-run option L
CL	For temperatures -40... +70 °C, and long-run option L
A	For temperatures -55... +70 °C. Arctic service model. Not available if 5. sign is "H" or 13. sign is "M".
F	Oversized NPT connections: fast operation
F1	Large oversized NPT connections: faster operation
F2	Largest oversized NPT connections: fastest operation
L	Long-run option
S	Super long-run option. (-20... +70 ºC)
Y	Special

11.	Screw material
-	Standard (without sign): Stainless steel for sizes 6 through 20 with aluminum cylinder. Steel zinc coated and passivated studs and nuts for sizes 25 and bigger with aluminum cylinder. Steel zinc coated and passivated studs and nuts for all sizes with carbon steel cylinder.
E	Stainless steel for sizes 25 and bigger with aluminium cylinder. Stainless steel for all sizes with steel cylinder.

12.	Non-standard operation range
-	Standard, X=0, Y=90
X	Valve closed position is limited to a given angle. **X can be any value between 0-90º.** For example, when closed position is limited to 30 º, **X = 30** (never fully closed).
Z	Valve open position is limited to a given angle. **Z can be any value between 90-0º.** For example, when open position is limited to 70 º, **Z = 70** (never fully open).
XZ	Valve closed and open position are limited. For example, X = 30 (closed position is limited to 30°) & Z = 70 (open position is limited to 70°)

13.	Special construction
-	No sign = B1 actuator model A
6	Protection class IP66M
7	Protection class IP67/IP67M
/B	B1 actuator model B
G	Oxygen service model, not compatible with “S” option
T	Tropicalization

12. VALMET PRODUCTS: MACHINERY REGULATION 2027

Intended use

The product is designed for flow control applications, including shut-off and/or modulating control duties. The product shall be specified, installed, operated, and maintained only by qualified and competent personnel.

The product is intended for installation in industrial piping systems equipped with a compatible actuator and controller. The product shall be used only with compatible media, including liquids, gases, and steam, or a mixture of the aforementioned, and within the pressure and temperature limits specified for the product.

Reasonably foreseeable misuse

1. Process and Operating Condition Misuse

- Operating the valve above its rated pressure (PS).
- Operating the valve outside its specified temperature limits (TS).
- Using the valve with chemically incompatible media, resulting in corrosion, material degradation, or seal swelling.
- Using the valve with abrasive or particulate-laden media that was not considered during product design.
- Using the valve in oxygen service, other reactive media or hazardous applications without appropriate cleaning, material selection, certification, or classification.
- Subjecting the valve to pressure surges, water hammer, or transient loads beyond the design basis.

2. Functional Misuse

- Using the valve or actuator as a step, platform, or climbing aid.
- Using the valve as a pipeline support or structural load-bearing element.

3. Installation Misuse

- Installing the valve with incorrect flange bolting, gasket selection, or tightening procedures.
- Installing the valve under pipe misalignment, creating excessive mechanical stress.
- Failure to clean or flush the pipeline before installation, resulting in debris-related damage.
- Failure to maintain cleanliness of specially cleaned valves, intended e.g. for oxygen service, during installation.
- Installing the valve in an orientation not intended for the specified application or not considered during product design.
- Combining incompatible valve and actuator configurations.

4. Actuation and Control System Misuse

- Applying actuator torque, thrust, or force beyond specified limits.
- Operating the actuator with incorrect supply pressure, voltage, or control signals.
- Bypassing, disabling, or overriding safety interlocks, features needed for normal operation or protective functions.
- Configuring fail-safe actions incorrectly (e.g., fail-open vs. fail-closed).
- Operating the valve at cycling rates exceeding its design life parameters.
- Using manual override functions while the system remains energized or pressurized without proper safeguards.

5. Maintenance and Service Misuse

- Disassembling or servicing the valve while pressurized or without proper isolation.
- Using non-approved, counterfeit, or unsuitable spare parts.
- Failure to follow specified tightening procedures for packing, fasteners, or bolted connections, including incorrect torque application (over- or under-tightening) and failure to follow the prescribed tightening sequence.
- Failure to perform maintenance inspections and service activities at prescribed intervals.
- Using incompatible lubricants, sealants, or maintenance chemicals.
- Incorrect reassembly resulting in leakage, impaired performance, or equipment malfunction.

6. Human Factors and Operational Misuse

- Applying excessive force or using extension tools (e.g., cheater bars) on handwheels or operating mechanisms.
- Operating the valve without adequate training, authorization, or procedural guidance.
- Unauthorized adjustment of limit switches, travel stops, or control settings.
- Failure to implement Lockout/Tagout/Testout (LOTOTO) procedures prior to maintenance activities.
- Misinterpretation of valve position indication or status feedback.

7. Environmental Misuse

- Operating outside the specified ambient temperature or other conditions range.
- Improper recycling or disposal of the product, its components, or spare parts at the end of their service life.

8. Transport, Storage, and Handling Misuse

- Improper lifting, handling, or transportation, including lifting by the actuator, stem, or other non-designated points.
- Storage without protective covers or suitable environmental protection, resulting in contamination or moisture ingress.

13. GENERAL SAFETY WARNINGS AND DISCLAIMERS

APPENDIX 1:

General safety warning

Lifting

1. Always use a lifting plan created by a qualified person to lift this equipment. Lifting guidance is provided in this IMO (Installation, Maintenance and Operation manual) to assist in lifting plan development. Think about the center of gravity (CG) of the equipment being lifted. Make sure the CG is always under the central lifting point.
2. Actuators may be equipped with lifting threads/lugs on the body or cylinder end caps. These are intended for use with the lifting plan.
3. Use only correct and approved lifting devices. Ensure that lifting devices and straps are securely attached to the equipment prior to lifting.
4. Check, that lifting devices are not damaged and in good condition with a valid check stamp prior to use.
5. Workers must be trained for lifting and handling valves.

Work activities on the actuator

1. Wear your personal safety equipment. Personal safety equipment includes but is not limited to protective shoes, protective clothing, safety glasses, helmet, hearing protection and working gloves.
2. Always follow the local safety instructions in addition to the Valmet instructions. If Valmet instructions conflict with local safety instructions, stop work and contact Valmet for more information.
3. Before beginning service on the equipment make sure that the actuator is disconnected from any kind of power source (pneumatic, hydraulic, and/or electric), and no stored energy is applied on the actuator (compressed spring, compressed air volumes, etc.). Do not attempt to remove a spring return actuator unless the stop screw is carrying the spring force.
4. Always make sure that the pipeline / valve pressure or temperature don't result in any risk when maintenance work is starting or being executed.
5. Keep hands and other body parts out of the flow port when the valve is being serviced and the actuator is connected to the valve. There is a high risk of serious injury to hands and/ or fingers due to malfunction if the valve suddenly starts to operate.
6. When the actuator is being serviced and the actuator is connected to the valve, never touch the inside of the valve. There is a high risk of serious injury to hands and/or fingers if the valve suddenly starts to operate due to malfunction.

General disclaimers

Receive, handle and unpacking.

1. Respect the safety warnings above!
2. Actuators are critical components for pipelines to control valves with high pressure fluids and must therefore be handled with care.
3. Store actuators and equipment in a dry and protected area until the equipment is installed.
4. Do not exceed the maximum storage temperatures given in the IMO (installation, maintenance, and operating instructions).
5. Keep the original packaging on the actuator as long as possible to avoid environmental contamination by dust, water, dirt, etc.
6. Remove the actuator or related accessories pneumatic supply port transportation protective caps just before connecting into plant supply network.

Operating

7. The identification plate (nameplate, or engraved markings) on the actuator gives the information of max. operating and ambient conditions.
8. Temperatures and pressures must never exceed values marked on the actuator identification plate. Exceeding these values may cause damage or personal injury.
9. Never exceed the actuator torque preset values (air supply, position). Application of excessive torque may cause damage to the valve.
10. Valmet actuators typically are designed to be used in atmospheric conditions. Do not use actuators under external pressurized conditions unless specifically designed and explicitly marked for this service.
11. As the use of the actuator is application specific, a number of factors should be taken into account when selecting an actuator for a given application. Therefore, some situations in which the actuators are used are outside the scope of this manual.
12. It is the end user's responsibility to confirm compatibility of the actuator materials with the intended service, however if you have questions concerning the use, application, or compatibility of the actuator for the intended service, contact Valmet for more information.
13. Never use enriched or pure oxygen as actuator supply medium.
14. Actuators intended for use in or with explosive atmospheres must be equipped with a grounding device and marked according ATEX (or equivalent international standards).
15. Extremely fast actuator operating strokes should be avoided especially if repeating cycles. Stroke speed should be limited by restrictor valves in such cases.

Maintenance

16. Respect the safety warnings above!
17. Plan service and maintenance actions, that spare parts, lifting devices and service personnel is available.
18. Maintain the actuator within the recommended minimum maintenance intervals or within the recommended maximum operating cycles.
19. Always make sure that the actuator is depressurized before starting any kind of maintenance work at a actuator.
20. Always check the position of the (valve) actuator before starting maintenance work. Follow the Lock out /tag out (LOTO) rules at the site before starting any maintenance activity.
    - See IMO for the correct actuator yoke/driver arm/lever arm key way position
    - Consider that the positioner may give wrong signals.
21. Sealing and bearing materials (soft parts) should be changed when the actuator is maintained. Always use original equipment manufacturers (OEM) spare parts to ensure proper performance of the repaired actuator.

22. Do not use sharp tools, grinding machines, or files to work on functional surfaces such as sealing or bearing surfaces as this can damage these surfaces.
23. All pressure containing parts must be inspected visually for damage or corrosion. Damaged parts must be replaced.
24. Check the condition of the hard bearings and counter surfaces. Replace parts if there are significant wear, scratches, or damage.
25. Make sure that the actuator and its accessories is positioned in the correct planned orientation into the pipeline.
26. If the actuators are marked to be suitable for explosive atmospheres the correct function of the discharging device must be tested before returning to service.
27. Always work in a clean environment. Avoid getting particles inside the actuator due to machining, grinding, or welding nearby.
28. Never store a maintained actuator without pneumatic supply port protection.
29. Actuator mounting and unmounting:
    - Before installing the actuator on to the valve, be sure the actuator is properly indicating the valve position. Failure to assemble these to indicate correct valve position may result in damage or personal injury.
    - When installing or removing a linkage kit, best practice is to remove the entire linkage assembly, including couplings which may fall off the valve during lifting or when position changes.
    - Mounting sets have been designed to support the weight of the Valmet actuator and recommended accessories. Use of the linkage to support additional equipment or additional weight such as people, ladders, etc. may result in equipment damage or personal injury.

APPENDIX 2:

B1 series lubrication instruction

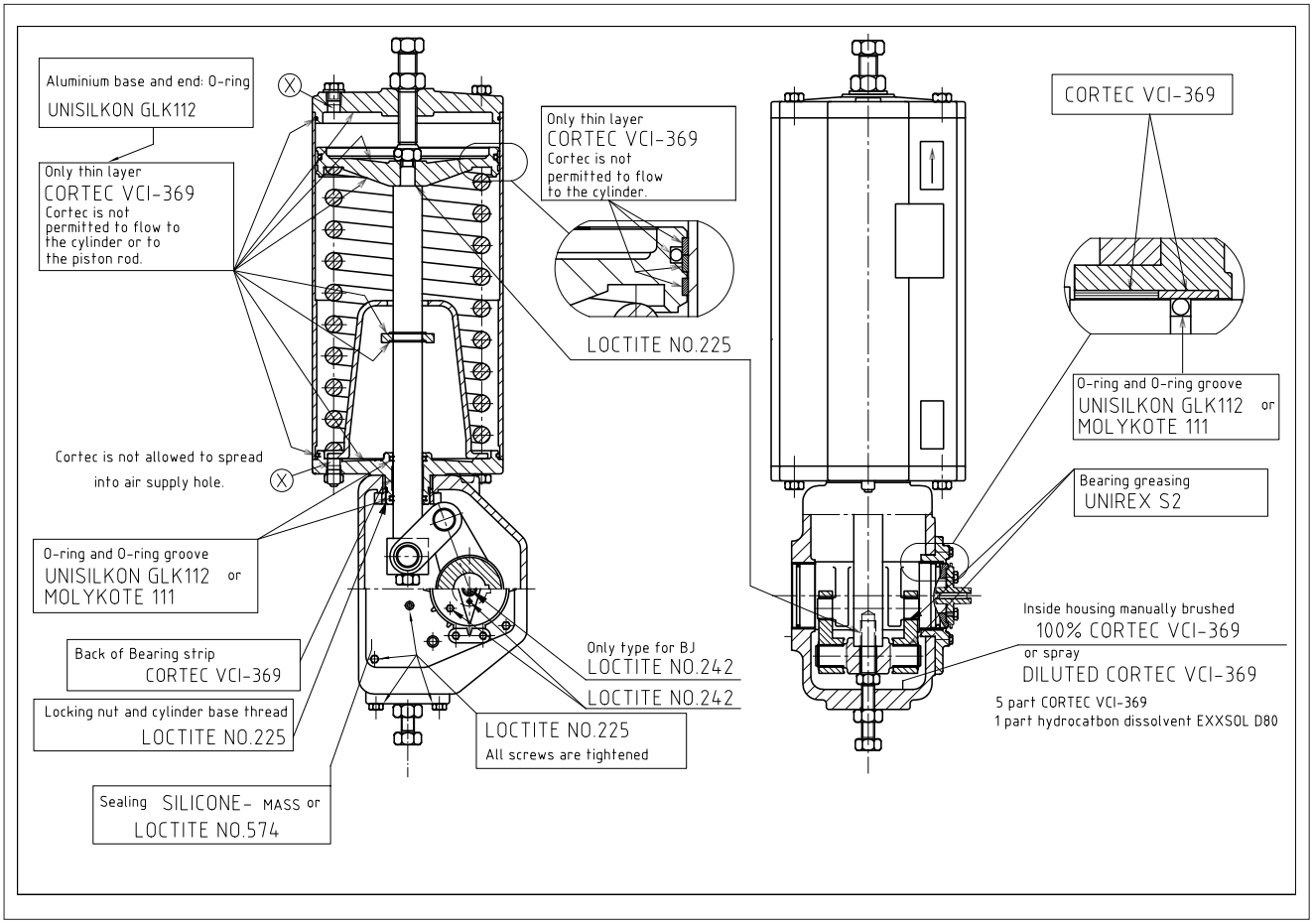

APPENDIX 3:

B1 series super long-run (S option) greasing instruction

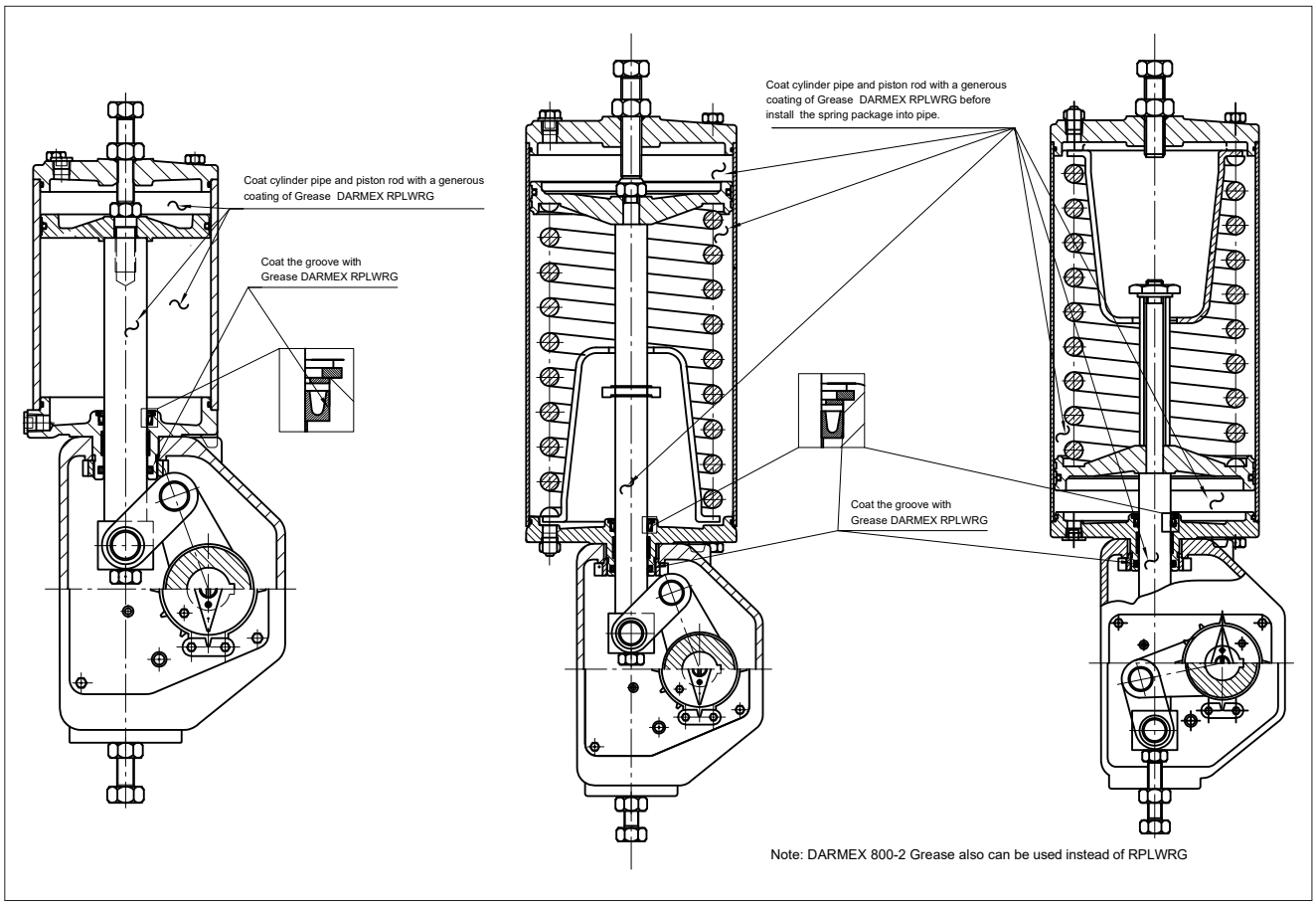

APPENDIX 4:
Lifting points for B1J piston

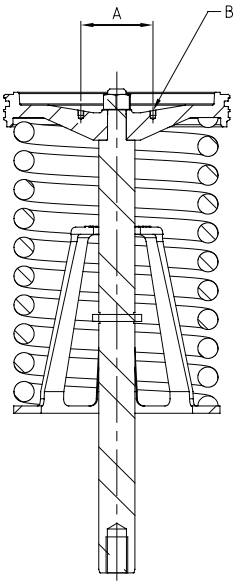

BJ Size	Item and Drawing	Weight of spring package	Dimension A	Lifting point B
BJ6	H102710/F37130	<10 kg	-	NA
BJ8	178590	<10 kg	-	NA
BJ10	178600	10 kg	-	NA
BJ12	178610	21 kg	80 mm	2*M8 ↓8 (Φ6.8↓12)
BJ16	178620	37 kg	80 mm	2*M8 ↓8 (Φ6.8↓12)
BJ20	178630	68 kg	100 mm	2*M10 ↓10 (Φ8.5↓15)
BJ25	178640	141 kg	105 mm	2*M10 ↓10 (Φ8.5↓15)
BJ32	199040	267 kg	110 mm	2*M12 ↓12 (Φ10.2↓18)
BJ40	H195984/F73855	418 kg	200 mm	2*M12 ↓12 (Φ10.2↓18)

Valmet Flow Control Oy
Vanha Porvoontie 229, 01380 Vantaa, Finland.
Tel. +358 10 417 5000.
www.valmet.com/flowcontrol

Subject to change without prior notice.
Neles, Neles Easyflow, Jamesbury, Stonel, Valvcon and Flowrox, and certain other trademarks, are either registered trademarks or trademarks of Valmet Oyj or its subsidiaries in the United States and/or in other countries.

© Valmet, 6BJ71EN - 10/2026